BLAZE

Clean Agent Gas Suppression System (HFC 227ea)

Model - BT-200

Description:

Clean Agent Gas Fire Suppression System is a pre-engineered clean agent solution designed to protect critical spaces and sensitive equipment. The system stores and releases Heptafluoropropane (HFC 227ea) to rapidly suppress fires without leaving residue or harming electronic components. Agent Properties:

- Chemical name: Heptafluoropropane (HFC 227ea)
- Physical State: Liquified compressed gas (stored as liquid, discharged as vapor)
- Appearance and Odor: Colorless, low odor
- Electrical Properties: Electrically non conductive vapor suitable for electronic equipment protection
- Environmental Profile: Ozone friendly, considered suitable for applications requiring low ozone depletion potential

Key Features:

- **Fast Knockdown:** Rapid discharge and fire suppression to minimize damage and downtime.
- **Clean Agent:** Leaves no residue, no post fire cleanup of sensitive equipment required.
- **Non Conductive:** Safe for use around energized electrical and electronic systems.
- **Modular Design:** Scalable for small enclosures to large equipment rooms.
- **Reliable Actuation:** Compatible with standard detection and release mechanisms.
- **Serviceability:** Designed for routine inspection, recharge, and maintenance.

System Pressure	25 / 42 / 50 Bar Options
Approvals	UL Listed

Applications:

- Data centers and server rooms
- Telecommunications facilities
- Control rooms and electrical switchgear rooms
- Archives, museums, and libraries
- Medical equipment rooms and laboratories
- Any space requiring rapid, residue free fire suppression

Standards:

The gaseous component, HFC-227EA complies with the following standards:

- Underwriters Laboratories Inc. (UL)
- US EPA SNAP Rpt.
- NFPA 2001 Clean Agent Fire suppression System

BLAZETECH SYSTEMS LTD.

contact@blaze-tech.co.uk Milton Keynes, United Kingdom www.blaze-tech.co.uk

Disclaimer: Images shown are for illustration purposes only. Actual products may vary in appearance and specification. Specifications are subject to change without notice.

PRECISION YOU CAN TRUST

Ver. A, 15032026, © Blaze 2026

BLAZE

Clean Agent Gas Suppression System (HFC 227ea)

Model - BT-200

System Components :

Clean Agent Gas System comprises pressurized cylinder(s), manifold (where required), connection and distribution piping, and nozzles. All proprietary components are supplied in kit form and must be secured to a suitable solid fixing point such as a wall or framework.

Storage Pressure and Agent State

- Reference temperature: 21 °C.
- Stored cylinder pressures: 25 bar, 42 bar, 50 bar (depending on cylinder type).
- Agent storage: Liquefied compressed gas in cylinders, discharged as a colorless, electrically non conductive vapor.

Design and Sizing

- Each BT200 system is engineered specifically for the protected enclosure.
- Gas distribution and discharge time are controlled by correct nozzle orifice sizing, orifice sizes are engraved on the nozzle body.
- Cylinder and nozzle selection is based on room volume, hazard classification, and required design concentration.

Operation Sequence:

- An electrical signal actuates the solenoid device on the master or pilot cylinder.
- Operation of the master/pilot cylinder pressurizes the pneumatic actuating line.
- The pressurized actuating line operates the pneumatic release pistons on slave cylinders, causing them to discharge the agent into the protected space.
- Agent is expelled through the distribution piping and nozzles, correct orifice sizing ensures the required concentration and uniform distribution.

Mounting and Installation Notes:

- Components must be mechanically secured to solid fixings or structural supports.
- Piping and nozzles must be routed and positioned to achieve the designed discharge pattern and concentration.
- Manifolds are used where multiple cylinders feed a common distribution network.
- System commissioning must verify actuation sequence, pneumatic line integrity, and nozzle flow.

Fire Classes Suppressed

Class A	Surface fires / ordinary combustible materials
Class B	Flammable liquid fires
Class C	Energized electrical equipment fires

Safety and Serviceability:

- Systems must be installed, commissioned, and serviced by qualified personnel in accordance with applicable standards and local codes.
- Regular inspection and testing of cylinders, actuators, pneumatic lines, and detection interfaces are required.
- Follow manufacturer instructions for handling, storage, and cylinder replacement.

Sizing and Design Process

- Nozzle selection and orifice dimensions are established through hydraulic and discharge simulations (utilizing software like Jensen Hughes® or equivalent) by integrating critical parameters like protected volume, design concentration, piping configuration, cylinder pressure, discharge duration, and nozzle coordinates
- The software calculates the precise orifice diameters required to ensure target concentration levels and balanced agent distribution within the mandated discharge window.

Installation and Commissioning Notes

- Secure nozzle to distribution piping per system layout, ensure nozzle orientation allows unobstructed 360° discharge.
- Confirm engraved orifice size matches design documentation before commissioning.
- Commissioning must include verification of discharge pattern and system pressure drop consistent with design calculations.
- When replacing a nozzle, match the engraved orifice size and BSP thread to maintain system performance.

Maintenance and Service

- Inspection frequency as per manufacturer's guidance and local fire / civil defence code.
- Inspect nozzles for blockage, corrosion, or mechanical damage.
- Remove debris from orifices using non-metallic tools, and avoid enlarging or deforming holes.
- Log nozzle orifice sizes and locations as part of the system as built documentation.

BLAZETECH SYSTEMS LTD.

contact@blaze-tech.co.uk Milton Keynes, United Kingdom www.blaze-tech.co.uk

Disclaimer: Images shown are for illustration purposes only. Actual products may vary in appearance and specification. Specifications are subject to change without notice.

PRECISION YOU CAN TRUST

Ver. A, 15032026, © Blaze 2026

BLAZE

Clean Agent Gas Suppression System (HFC 227ea)

Model - BT-200

Cylinder Specifications, Welded - Standard Supply

Material	Mild Steel
Filling - General Cylinder	0.5 kg/L up to maximum of 1kg/L
Filling - Cylinder with Liquid Level Indicator	0.5 kg/L up to maximum of 0.8kg/L
Filling Pressure	25 bar @ 21°C
Test Pressure	63 bar
Standard of Compliance	TPED Directive 2010/35/EU
Colour	Red

Cylinder Specifications, Seamless - Optional Supply

Material	Chromium Molybdenum Alloy Steel
Filling - General Cylinder	0.5 kg/L up to maximum of 1kg/L
Filling Pressure	42 / 50 bar @ 21°C
Test Pressure	300 bar
Standard of Compliance	ISO 9809-1
Colour	Red

BT200 Cylinder Assembly (Welded)

Cylinder and Valve Assembly Dimensions for TPED Cylinders

Part Number	Capacity (L)	Maximum Recommended Agent Fill %	Valve Outlet Size (in.)	A (mm)	B (mm)	C (mm)	Burst Disc's Burst Pressure
BTCAGS-TPEDW-009	9	100%	1"	273	377	571	55 Bar
BTCAGS-TPEDW-016A	16	100%	1"	273	449	643	55 Bar
BTCAGS-TPEDW-016B	16.6	100%	1"	228.6	578	761	55 Bar
BTCAGS-TPEDW-032A	32	100%	1"	324	579	730	55 Bar
BTCAGS-TPEDW-032B	32	100%	1-1/2"	324	584	730	55 Bar
BTCAGS-TPEDW-032B.1	32	100%	1-1/2"	324	584	730	55 Bar
BTCAGS-TPEDW-052	52	100%	1-1/2"	324	844	990	55 Bar
BTCAGS-TPEDW-052.1	52	100%	1-1/2"	324	844	990	55 Bar
BTCAGS-TPEDW-070	70	100%	1-1/2"	324	1042	1192	55 Bar
BTCAGS-TPEDW-070.1	70	100%	1-1/2"	324	1042	1193	55 Bar
BTCAGS-TPEDW-100	100	84%	1-1/2"	406	1019	1187	55 Bar
BTCAGS-TPEDW-100.1	100	84%	1-1/2"	406	1019	1187	55 Bar
BTCAGS-TPEDW-120A	120	88%	1-1/2"	406	1182	1350	55 Bar
BTCAGS-TPEDW-120A,1	120	88%	1-1/2"	406	1182	1350	55 Bar
BTCAGS-TPEDW-120B	120	88%	2"	406	1192	1350	55 Bar
BTCAGS-TPEDW-120B.2	120	88%	2"	406	1192	1350	55 Bar
BTCAGS-TPEDW-150	150	88%	2"	406	1437	1596	55 Bar
BTCAGS-TPEDW-150.1	150	88%	2"	406	1437	1596	55 Bar
BTCAGS-TPEDW-180	180	86%	2"	462	1317	1493	55 Bar
BTCAGS-TPEDW-180.1	180	86%	2"	462	1317	1493	55 Bar
BTCAGS-TPEDW-200	200	84%	2"	462	1447	1623	55 Bar
BTCAGS-TPEDW-200.1	200	84%	2"	462	1447	1623	55 Bar
BTCAGS-TPEDW-240A	240	84%	2"	508	1468	1656	55 Bar
BTCAGS-TPEDW-240A.1	240	84%	2"	508	1468	1656	55 Bar
BTCAGS-TPEDW-240B	240	84%	3"	508	1523	1656	55 Bar
BTCAGS-TPEDW-240B.1	240	84%	3"	610	1523	1656	55 Bar
BTCAGS-TPEDW-300	300	84%	3"	610	1363	1506	55 Bar
BTCAGS-TPEDW-300.1	300	84%	3"	610	1363	1506	55 Bar
BTCAGS-TPEDW-369	369	84%	3"	610	1608	1751	55 Bar
BTCAGS-TPEDW-369.1	369	84%	3"	610	1608	1751	55 Bar
BTCAGS-TPEDW-420	420	84%	3"	610	1798	1941	55 Bar
BTCAGS-TPEDW-420.1	420	84%	3"	610	1798	1941	55 Bar

BLAZETECH SYSTEMS LTD.

contact@blaze-tech.co.uk

Milton Keynes, United Kingdom

www.blaze-tech.co.uk

Disclaimer: Images shown are for illustration purposes only. Actual products may vary in appearance and specification. Specifications are subject to change without notice.

PRECISION YOU CAN TRUST

Ver. A, 15032026, © Blaze 2026

BLAZE

Clean Agent Gas Suppression System (HFC 227ea)

Model - BT-200

TPED Cylinders with Liquid Level Indicator

Part Number	Capacity (L)	Maximum Recommended Agent Fill %	Valve Outlet Size (in.)	A (mm)	B (mm)	C (mm)	Liquid Level Inlet Size
BTCAGS-TPEDW-100-LLI	100	84%	1-1/2"	406	1019	1187	2"-11.5 NPSC
BTCAGS-TPEDW-120A-LLI	120	88%	1-1/2"	406	1182	1350	2"-11.5 NPSC
BTCAGS-TPEDW-120B-LLI	120	88%	2"	406	1192	1350	2"-11.5 NPSC
BTCAGS-TPEDW-150-LLI	150	88%	2"	406	1437	1596	2"-11.5 NPSC
BTCAGS-TPEDW-180-LLI	180	86%	2"	462	1317	1493	2"-11.5 NPSC
BTCAGS-TPEDW-200-LLI	200	84%	2"	462	1447	1623	2"-11.5 NPSC
BTCAGS-TPEDW-240A-LLI	240	84%	2"	508	1468	1656	2"-11.5 NPSC
BTCAGS-TPEDW-240A.1-LLI	240	84%	2"	508	1468	1656	2"-11.5 NPSC
BTCAGS-TPEDW-240B-LLI	240	84%	3"	508	1523	1656	2"-11.5 NPSC
BTCAGS-TPEDW-240B.1-LLI	240	84%	3"	508	1523	1656	2"-11.5 NPSC
BTCAGS-TPEDW-300-LLI	300	84%	3"	610	1363	1506	2"-11.5 NPSC
BTCAGS-TPEDW-300.1-LLI	300	84%	3"	610	1363	1506	2"-11.5 NPSC
BTCAGS-TPEDW-369-LLI	369	84%	3"	610	1608	1751	2"-11.5 NPSC
BTCAGS-TPEDW-369.1-LLI	369	84%	3"	610	1608	1751	2"-11.5 NPSC
BTCAGS-TPEDW-420-LLI	420	84%	3"	610	1798	1941	2"-11.5 NPSC
BTCAGS-TPEDW-420.1-LLI	420	84%	3"	610	1798	1941	2"-11.5 NPSC

BT 200 Cylinder Assembly (Seamless)

Seamless Cylinder and Valve Assembly Dimensions

Part Number	Capacity (L)	Maximum Recommended Agent Fill %	Valve Outlet Size (in.)	A (mm)	B (mm)	C (mm)	Burst Disc's Burst Pressure
BTCAGS-TPEDS-010	10	100%	1"	140	861	956	90 Bar
BTCAGS-TPEDS-020	20	100%	1"	204	831	926	90 Bar
BTCAGS-TPEDS-030A	30	100%	1"	204	1166	1261	90 Bar
BTCAGS-TPEDS-030B	30	100%	1-1/2"	232	986	1099	90 Bar
BTCAGS-TPEDS-050A	50	100%	1-1/2"	229	1496	1609	90 Bar
BTCAGS-TPEDS-050B	50	100%	1-1/2"	232	1506	1619	90 Bar
BTCAGS-TPEDS-080A	80	100%	1-1/2"	360	1081	1194	90 Bar
BTCAGS-TPEDS-080B	80	100%	2"	406	881	994	90 Bar
BTCAGS-TPEDS-100A	100	100%	1-1/2"	360	1296	1409	90 Bar
BTCAGS-TPEDS-100B	100	100%	2"	406	1046	1159	90 Bar
BTCAGS-TPEDS-140A	140	100%	2"	360	1755	1884	90 Bar
BTCAGS-TPEDS-140B	140	100%	2"	406	1385	1515	90 Bar
BTCAGS-TPEDS-180A	180	100%	2"	406	1715	1845	90 Bar
BTCAGS-TPEDS-180B	180	100%	2"	406	1759	1888	90 Bar
BTCAGS-TPEDS-180C	180	100%	2"	406	1755	1885	90 Bar

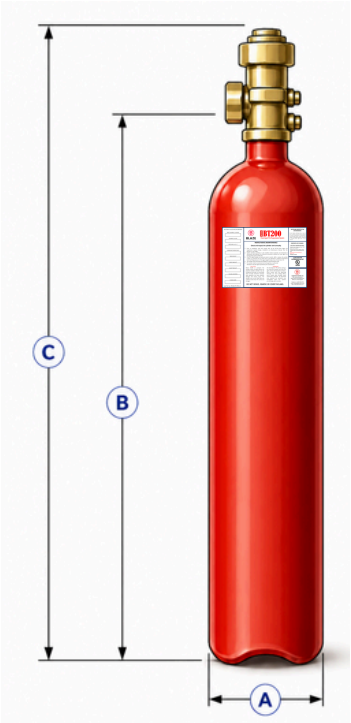

BLAZETECH SYSTEMS LTD.

contact@blaze-tech.co.uk Milton Keynes, United Kingdom www.blaze-tech.co.uk

Disclaimer: Images shown are for illustration purposes only. Actual products may vary in appearance and specification. Specifications are subject to change without notice.

Ver. A, 15032026, © Blaze 2026

Nozzle

BT200 360° Discharge Nozzle is a single variant, full coverage nozzle designed for uniform agent distribution in protected enclosures. Each nozzle features 8 orifice holes and is available in multiple orifice sizes to meet system design requirements.

Key Features:

- **Discharge Pattern:** 360° uniform dispersion.
- **Number of Orifices:** 8 holes per nozzle.
- **Orifice Sizing Resolution:** 0.1 mm increments, holes are drilled to the exact diameter specified by the system design.
- **Thread Type:** BSP threaded connection for all nozzle sizes.
- **Identification:** Orifice size engraved on the nozzle body for easy verification during installation and maintenance.

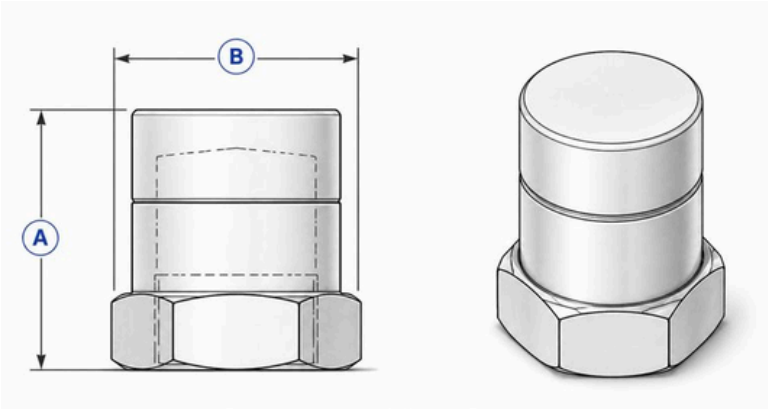

Part Number	Material	Sizes (inches)	A (mm)	B (mm)	Allowable Orifice Size, mm
BTCAGS-NOZ-HFC-BR-015-UL	Brass	1/2"	45	31.75	2.2 - 4.9
BTCAGS-NOZ-HFC-BR-020-UL		3/4"	45	38.1	3.4 - 6.6
BTCAGS-NOZ-HFC-BR-025-UL		1"	56	44.45	4.3 - 8.4
BTCAGS-NOZ-HFC-BR-032-UL		1-1/4"	65	50.8	5.6 - 11.0
BTCAGS-NOZ-HFC-BR-040-UL		1-1/2"	70	63.5	6.5 - 12.9
BTCAGS-NOZ-HFC-BR-050-UL		2"	88	76.2	8.4 - 16.6

*Allowable Orifice Size is subject to Design Calculations

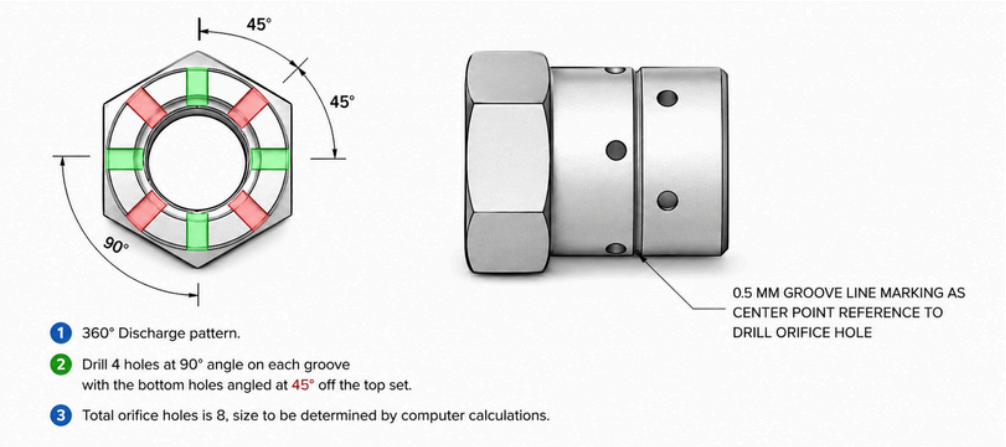

Disclaimer: Images shown are for illustration purposes only. Actual products may vary in appearance and specification. Specifications are subject to change without notice.

Ver. A, 15032026, © Blaze 2026