BLAZE

Resilient Seat OS&Y Gate Valve

Model : BT 5001 - 200 / 250

Description:

The BT 5001 - 200 / 250 OS&Y Resilient Seated Gate Valve is designed for reliable isolation in fire protection and water distribution systems. Featuring a fully encapsulated EPDM wedge, the valve provides bubble-tight shut-off, smooth operation and low operating torque. The Outside Screw and Yoke (OS&Y) design offers a clear visual indication of the valve position, making it ideal for fire protection applications. Manufactured from high-quality ductile iron and protected with an internal and external Fusion Bonded Epoxy (FBE) coating, the valve delivers excellent corrosion resistance and long-term durability.

Specifications :

Size	DN350 - DN600 (14" - 24")
Maximum Working Pressure	250 psi for 14" to 18" 200 psi for 20" to 24"
Approvals	FM 1120 / 1130 Approved, UL 262 Listed
Design Standard	AWWA C515
End Connection	Standard Supply ANSI Class 150 RF / Grooved to AWWA C606 Standard. *ANSI Class 125 /PN16 RF Flange Optional
Face to Face Dimensions	ANSI/ASME B16.10, EN558-1 series 3
Temperature Range	0° C to 80°C (32°F to 176°F)
Coating	Fusion Bonded Epoxy Coating in accordance with ANSI / AWWA C550. Average Coating Thickness 250 Microns
Stem	SS 304 Stem as Standard. Optional - Bronze / SS 316 Stem
Wedge	Ductile-Iron Wedge, EPDM Encapsulated.

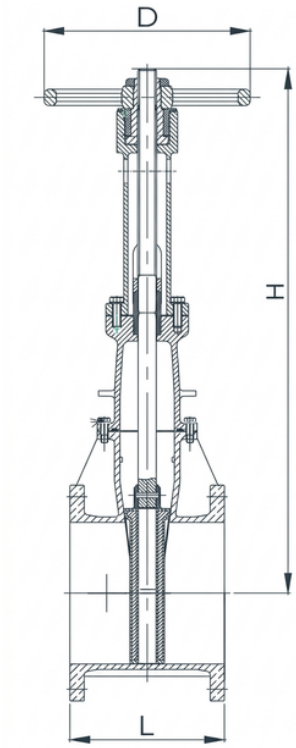

Options :

- 14"-20" are available With Supervisory Tamper Switch.
- Stainless Steel Fasteners: A2-70 or A4-70.
- BUNA-S (SBR) available for Fracking Waste Water / Special Applications

Dimensions:

Order Code	Size	L (mm / inch)	H (OPEN) (mm / inch)	D (mm / inch)
BT-5001-350-250-RF	14"	381 / 15.0"	1630 / 64.2"	535 / 21.1"
BT-5001-400-250-RF	16"	406 / 16.0"	1860 / 73.0"	535 / 21.1"
BT-5001-450-250-RF	18"	432 / 17.0"	2082 / 82.0"	610 / 24.0"
BT-5001-500-200-RF	20"	457 / 18.0"	2290 / 90.0"	610 / 24.0"
BT-5001-600-200-RF	24"	508 / 20.0"	2695 / 106.1"	762 / 30.0"

BLAZETECH SYSTEMS LTD.

contact@blaze-tech.co.uk Milton Keynes, United Kingdom www.blaze-tech.co.uk

Disclaimer: Images shown are for illustration purposes only. Actual products may vary in appearance and specification. Specifications are subject to change without notice.

Ver. A, 15032026, © Blaze 2026

BLAZE

Resilient Seat OS&Y Gate Valve

Model : BT 5001 - 200 / 250

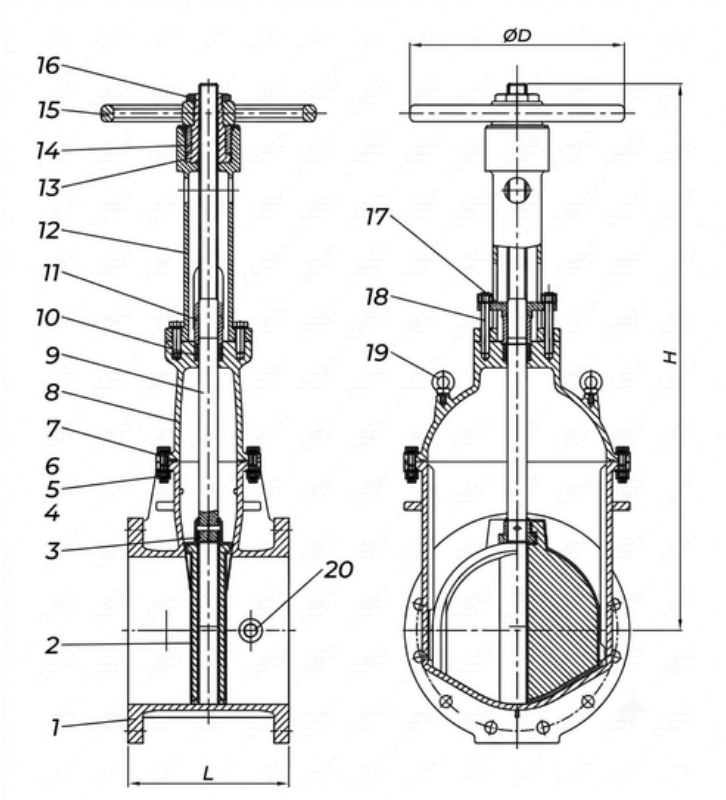

Material Specification :

Item	Part Name	Material	ASTM Specification
1	Body	Ductile Iron	A536 Grade 65-45-12
2	Wedge	Ductile Iron with EPDM Fully Encapsulated	
3	Wedge Nut	Bronze	B148 C95200
4	Bolt	Carbon Steel	A307 Grade B
5	Washer	Stainless Steel	A276 Type 304
6	Nut	Carbon Steel	A307 Grade B
7	Gasket	Rubber EPDM	D2000
8	Bonnet	Ductile Iron	A536 Grade 65-45-12
9	Stem	Stainless Steel	A276 Type 304
10	Packing	Graphite	Non-Asbestos
11	Packing Bushing	Brass	B124 C37700
12	Yoke	Ductile Iron	A536 Grade 65-45-12
13	Stem Nut	Bronze	B148 C95200
14	Lock Nut	Ductile Iron	A536 Grade 65-45-12
15	Handwheel	Ductile Iron	A536 Grade 65-45-12
16	Handwheel Nut	Ductile Iron	A536 Grade 65-45-12
17	Gland	Ductile Iron	A536 Grade 65-45-12
18	Stud	Stainless Steel	F593 Grade 304
19	Eyebolt	Carbon Steel	A307 Grade B
20	Plug (Optional)	Malleable Iron	A47 Grade 22010

Receiving and Storage :

Unloading

Handle each valve carefully during unloading and do not drop it. Never lift or carry the valve by the stem or handwheel, as this may damage the valve or result in personal injury. Always use appropriate lifting equipment and approved lifting points where necessary.

Upon receipt, inspect the resilient-seated gate valve for any signs of damage that may have occurred during transportation. Verify that the valve complies with the specified order and product requirements.
Carry out a visual inspection of the sealing surfaces to check for damage, scoring or other defects. Inspect the valve for bent stems, cracked components, loose fasteners, missing parts or accessories, and any other signs of mishandling during transit.
Before installation, operate the valve through one complete open-and-close cycle in its intended installation position to ensure smooth and correct operation.

Storage

Store resilient-seated gate valves in a clean, dry environment, preferably indoors, to protect them from moisture, dust and other environmental conditions.
Store the valve with the wedge in the nearly closed position to minimise unnecessary compression of the resilient seat. The EPDM wedge should also be protected from direct sunlight, ozone and chemical exposure.
In cold climates, fully drain the valve and leave it slightly open before storage to prevent water from freezing inside the valve body, which may damage the casting.
If outdoor storage is unavoidable, store the valve in the vertical position. Horizontal storage may allow rainwater to collect inside the valve body, increasing the risk of freezing and casting damage.

BLAZETECH SYSTEMS LTD.

contact@blaze-tech.co.uk Milton Keynes, United Kingdom www.blaze-tech.co.uk

Disclaimer: Images shown are for illustration purposes only. Actual products may vary in appearance and specification. Specifications are subject to change without notice.

Ver. A, 15032026, © Blaze 2026

Resilient Seat OS&Y Gate Valve

Model : BT 5001 - 200 / 250

Layout and Siting :

The location of the valve should be considered during the system design stage to ensure adequate access for operation, inspection, maintenance and repair.

The valve and associated pipework must be adequately supported to prevent external loads or pipeline stresses from being transferred to the valve body. Larger valves may require independent supports or anchorage.

The valve may be installed in the following orientations:

- In horizontal pipework with the stem in the vertical position.
- In vertical pipework with the stem in the horizontal position.

Note: The valve should not be installed in horizontal pipework with the stem in the horizontal position, as this may affect the valve's shut-off performance.

For end-of-line applications where the valve is normally kept closed and operated infrequently, it is recommended that the operating mechanism is fitted with a locking device or that a blanking flange is installed on the downstream side of the valve for additional safety.

Installation :

1. Before installation, verify that the identification plate and valve body markings match the system requirements.
2. Check that all bolts are securely tightened. Protect exposed fasteners against corrosion using a suitable protective coating or polyethylene wrapping where required.
3. Remove all protective packaging and end caps immediately before installation. Inspect the valve interior to ensure it is clean and free from dirt or foreign material. Check that the mating pipe flanges and valve flanges are clean, undamaged and suitable for the gasket. Do not install the valve if any defects that could cause leakage are found.
4. Never lift or carry the valve by the stem or handwheel. Use appropriate lifting equipment and approved lifting points.
5. Do not use the valve to correct misaligned pipework.
6. Ensure the valve and adjoining pipework are correctly aligned and adequately supported to prevent external loads or pipeline stresses from being transferred to the valve body.
7. Apply a suitable lubricant to the bolt threads where required. Tighten the flange bolts evenly using a criss-cross (cross-over) sequence to ensure uniform gasket compression and prevent stress on the valve and pipe joints.

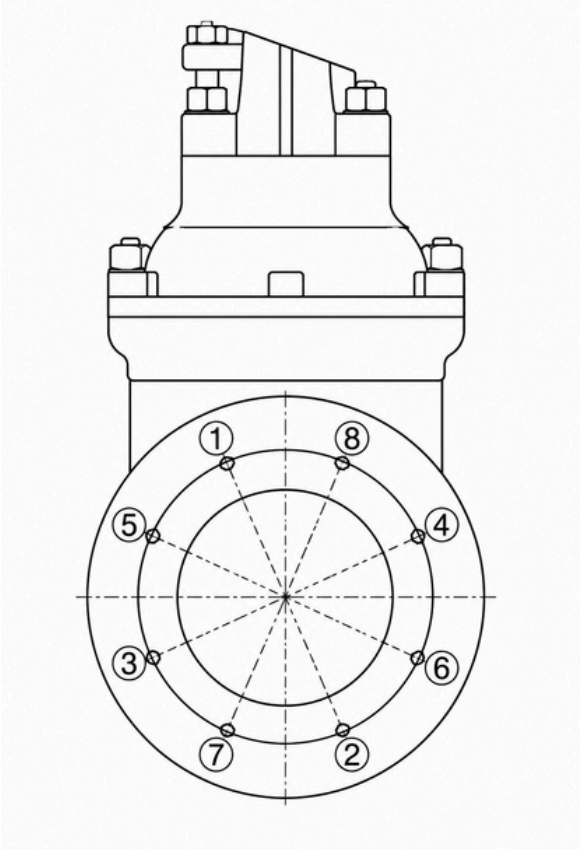

Operation :

Open the valve by turning the handwheel in the direction indicated by the arrow until it reaches the fully open position. To close the valve, turn the handwheel in the opposite direction until it reaches the fully closed position.

The valve is designed for fully open or fully closed operation only and should not be used for throttling or regulating flow.

Note: Temperature changes may affect valve operation. A valve closed at high temperature may become difficult to open after cooling due to contraction of the components. Likewise, a valve closed at ambient temperature may become difficult to operate if the fluid temperature increases, causing thermal expansion of the stem and tighter seating of the wedge.

BLAZETECH SYSTEMS LTD.

contact@blaze-tech.co.uk Milton Keynes, United Kingdom www.blaze-tech.co.uk

Disclaimer: Images shown are for illustration purposes only. Actual products may vary in appearance and specification. Specifications are subject to change without notice.

Ver. A, 15032026, © Blaze 2026

Maintenance :

Before carrying out any maintenance, ensure the valve is fully isolated from the system, depressurised and at ambient temperature. Always use appropriate tools and equipment, and follow all applicable site safety procedures.

Where work may generate sparks, ensure the work area is free from combustible dust and that a suitable risk assessment has been completed before maintenance begins.

Inspect the valve regularly for signs of wear, corrosion or damage. In corrosive environments, periodically check the wall thickness of the valve body and bonnet. If the wall thickness has been reduced by 25% or more, the valve should be replaced.

Gland Adjustment :

The stem gland may require adjustment during installation and periodic inspection to maintain an effective seal.

Tighten the gland nuts evenly in a clockwise direction until leakage stops or a slight increase in operating resistance is felt. Do not overtighten.

Packing Replacement :

- Stop the circulating pumps and fully open the valve.
- Remove the gland nuts and lift off the gland follower.
- Carefully remove the old graphite packing.
- Install new packing rings, ensuring the joints are staggered by approximately 30°.
- Refit the gland follower and tighten the gland nuts evenly until a leak-free seal is achieved.

Caution: Tighten both gland nuts evenly. Uneven tightening may cause leakage or premature packing wear.

Bonnet Gasket Replacement :

- Isolate and drain the valve before starting work.
- Fully open the valve.
- Remove the bonnet bolts and lift off the bonnet assembly together with the wedge.
- Replace the bonnet gasket with a new gasket.
- Reassemble the bonnet, ensuring the wedge guides are correctly aligned with the body guides.
- Tighten the bonnet bolts evenly using a criss-cross sequence to ensure uniform gasket compression.

Disclaimer: Images shown are for illustration purposes only. Actual products may vary in appearance and specification. Specifications are subject to change without notice.

PRECISION YOU CAN TRUST

Ver. A, 15032026, © Blaze 2026