BLAZE

Resilient Seat OS&Y Gate Valve

Model : BT 5001

Description:

The BT-5001 OS&Y Gate Valve is a resilient-seated, hand-operated valve used as an on / off control in fire protection systems. Its Outside Screw & Yoke (OS&Y) design allows the operator to visually confirm whether the valve is open or closed, which is a critical safety requirement for fire systems.

Specifications :

Size	DN50 - DN300 (2” - 12”)
Maximum Working Pressure	20.7 bar (300 psi)
Approvals	FM 1120 / 1130 Approved, UL 262 Listed
Design Standard	AWWA C515
End Connection	Standard Supply ANSI B16.42 Class 150 RF / Grooved Ends to AWWA C606 Standard. * ANSI B16.1 /PN16 RF Flange Optional
Face to Face Dimensions	ANSI/ASME B16.10, EN558-1 series 3
Temperature Range	0° C to 80°C (32°F to 176°F)
Stem	SS 304 as Standard. * Optional - Bronze / SS 316
Wedge	Ductile-Iron Wedge, EPDM Encapsulated.
Coating	Fusion Bonded Epoxy Coating in accordance with ANSI / AWWA C550. Average Coating Thickness 250 Microns

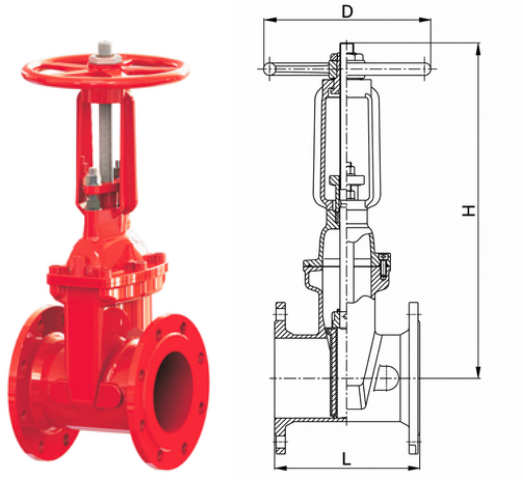

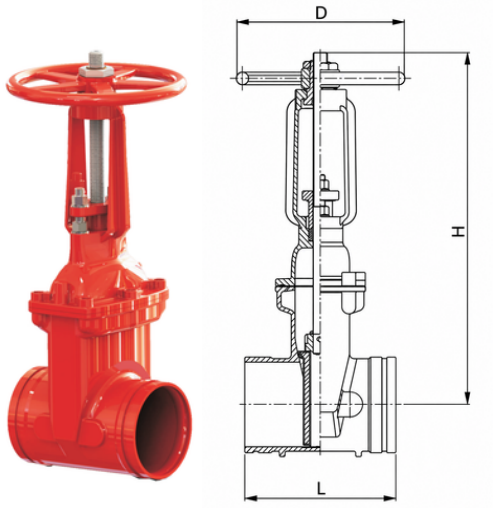

Dimensions:

Order Code	DN	INCH	L (mm/inch)	D (mm/inch)	H (Open) (mm/inch)	H (Close) (mm/inch)	Weight (Kg)		No of Turns to Open
							Flanged	Grooved	
BT-5001-050-300-RF / GG	50	2"	178 / 7.0	183 / 7.2	385 / 15.2	333 / 13.1	12.8	12	6.8
BT-5001-065-300-RF / GG	65	2½"	191 / 7.5	183 / 7.2	415 / 16.3	349 / 14	15.4	12.8	8.5
BT-5001-080-300-RF / GG	80	3"	203 / 8.0	253 / 10.0	518 / 20.4	439 / 17.6	26.25	18.8	10.5
BT-5001-100-300-RF / GG	100	4"	229 / 9.0	253 / 10.0	561 / 22.1	462 / 18.5	28.6	21.2	12.9
BT-5001-125-300-RF / GG	125	5"	254 / 10.0	306 / 12.0	714 / 28.1	590 / 23.6	47.8	37	15.9
BT-5001-150-300-RF / GG	150	6"	267 / 10.5	306 / 12.0	782 / 30.8	630 / 25.2	50	40.4	19.5
BT-5001-200-300-RF / GG	200	8"	292 / 11.5	355 / 14.0	981 / 38.6	782/ 31.3	77.8	60.5	25.6
BT-5001-250-300-RF / GG	250	10"	330 / 13.0	445 / 17.5	1244 / 49.0	991 / 39.6	135	110	31.8
BT-5001-300-300-RF / GG	300	12"	356 / 14.0	445 / 17.5	1376 / 54.2	1075 / 43	185	138	38.1

BLAZETECH SYSTEMS LTD.

contact@blaze-tech.co.uk Milton Keynes, United Kingdom www.blaze-tech.co.uk

Disclaimer: Images shown are for illustration purposes only. Actual products may vary in appearance and specification. Specifications are subject to change without notice.

PRECISION YOU CAN TRUST

Ver. A, 15032026, © Blaze 2026

BLAZE

Resilient Seat OS&Y Gate Valve

Model : BT 5001

Installation:

The BT-5001 is designed for both indoor and outdoor use. It can be installed in any orientation (horizontal, vertical, or otherwise) with water flowing in either direction.

Pre-Installation Requirements:

- Choose a location that allows ample room for manual operation and future maintenance.
- Ensure the valve is properly supported to eliminate movement and protect the pipes from vibration-induced stress.

Installation Steps :

1. Perform a visual check. Ensure the valve interior, flanges, and connecting pipes are completely free of debris.
2. Maintain the valve in the fully closed position throughout storage, transport, and the actual installation process.
3. Use high-quality gaskets between the valve and pipe flanges. Tighten the bolts using a crossover (star) pattern to ensure even pressure.
4. Once the bolts are tight, cycle the valve (fully open and fully close it) several times to verify smooth mechanical movement.
5. Ensure the valve is in the fully open position before you introduce pressure to the system.

Operational Best Practices

- Applying excessive force to open / close the valve can damage internal components and will void the warranty.
- Never use the valve to pull a pipeline into place. This stress can cause permanent damage to the valve body or seals.
- Debris is the primary cause of leaks. Always flush the pipeline to clear out foreign materials before closing the valve to protect the resilient seat.

Inspection & Upkeep

- While these valves do not require frequent servicing, you should perform annual operational checks in accordance with NFPA or your local Authority Having Jurisdiction (AHJ) guidelines.
- Regularly check for leaks at the flange connections and around the stem.
- When installed outdoors, minor paint discoloration may occur over time; this is purely aesthetic and does not affect the valve's mechanical performance.

Safety Requirements

- All inspections and repairs must be conducted by trained professionals.
- Always completely de-pressurize the system before attempting any maintenance or disassembly.

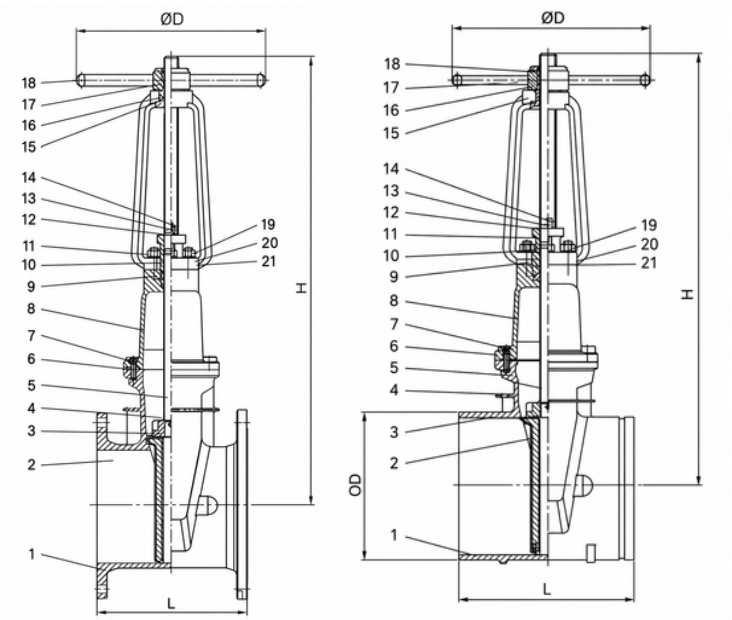

Material Specifications

No.	Part	Material	ASTM Specification
1	Body	Ductile Iron	A536 Grade 65-45-12
2	Wedge	EPDM Fully Encapsulated Ductile Iron	
3	Wedge Nut	Stainless Steel	A351 Grade CF8
4	O-Ring	Rubber	D2000 NBR
5	Stem	Stainless Steel	A276 Type 304
6	Body / Bonnet Gasket	Rubber	D2000 EPDM
7	Screw	Carbon Steel	A307 Grade B
8	Bonnet	Ductile Iron	A536 Grade 65-45-12
9	Packing	Graphite	Non-Asbestos
10	Gland	Ductile Iron	A536 Grade 65-45-12
11	Yoke	Ductile Iron	A536 Grade 65-45-12
12	Washer	Stainless Steel	A276 Type 304
13	Nut	Stainless Steel	F593 Grade 316
14	Bolt	Stainless Steel	F593 Grade 304
15	Stem Nut	Bronze	B148 C95200
16	Washer	Brass	B124 C37700
17	Handwheel	Ductile Iron	A536 Grade 65-45-12
18	Handwheel Nut	Ductile Iron	A536 Grade 65-45-12
19	Washer	Stainless Steel	A276 Type 304
20	Nut	Carbon Steel	A307 Grade B
21	Bolt	Carbon Steel	A307 Grade B

BLAZETECH SYSTEMS LTD.

contact@blaze-tech.co.uk Milton Keynes, United Kingdom www.blaze-tech.co.uk

Disclaimer: Images shown are for illustration purposes only. Actual products may vary in appearance and specification. Specifications are subject to change without notice.

PRECISION YOU CAN TRUST

Ver. A, 15032026, © Blaze 2026