BLAZE

Dry Barrel Fire Hydrant

Model : BT 5221

Description:

The BT 5221 Dry Barrel Fire Hydrant is designed to provide a reliable water supply for firefighting applications in areas exposed to freezing conditions. Its dry barrel design keeps water below ground level when not in use, preventing damage caused by frost.
Manufactured in accordance with AWWA C502 standards, the hydrant offers excellent flow performance, durable construction, and dependable operation. It is suitable for municipal, industrial, commercial, and infrastructure fire protection systems, with multiple nozzle configurations available to meet various installation requirements.

Specifications:

- FM 1510 Approved / UL 246 Listed
- Max Working Pressure 17.2 Bar (250 psi)
- Meets or Exceeds the Requirements of AWWA C502 Standard.
- NFPA 1963 Standard Nozzle Threads.
- Traffic Feature with Duplex Stainless Steel Safety Stem Coupling.
- Excellent Flow Characteristics.
- Dry Top Design with O-ring Sealed Oil Reservoir.
- Dual Auto-frost Bronze Drain Valves as Standard.
- Fusion Bonded Epoxy Coating

Options:

- Monitor Style Available.
- Monitor Flange: ASME B16.1 Class 125, Size 4"or 3".
- Multiple Nozzle Configurations
- Mechanical Joint Base Elbow.

Buried Depth Dimensions:

Options	L (Buried Depth) (ft-inch)
1	1'- 0"
2	2'- 0"
3	3'- 0"
4	3'- 6"
5	4'- 0" *
6	4'- 6"
7	5'- 0"
8	5'- 6"
9	6'- 0"
10	6'- 6"
11	7'- 0"

*** Standard Supply**

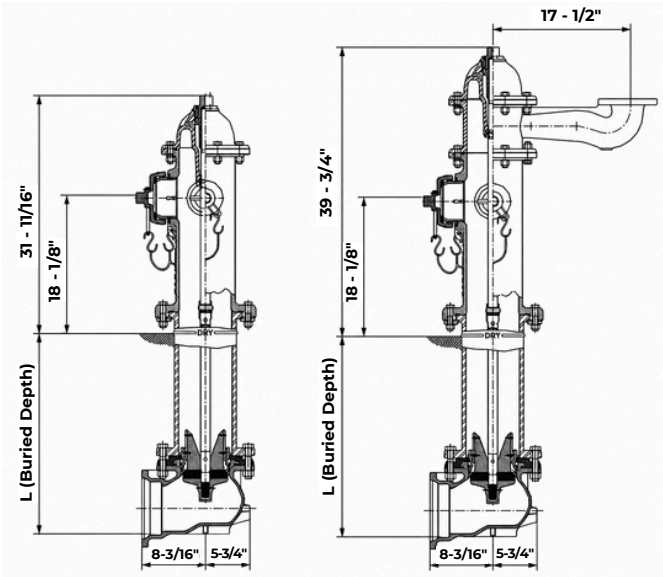

Options :

Model	Connections	Hose outlet	Pumper Nozzle Style	Monitor	Way
BT 5221	-2H0P	2 x 2.5"	N/A	N/A	2-Way
BT 5221	-2H0PM	2 x 2.5"	N/A	Yes	2-Way
BT 5221	-2H1P	2 x 2.5"	1x 4" or 4.5" Nozzle, or 5" Storz	N/A	3-Way
BT 5221	-2H1PM	2 x 2.5"	1x 4" or 4.5" Nozzle, or 5" Storz	Yes	3-Way
BT 5221	-3H1P	3 x 2.5"	1x 4" or 4.5" Nozzle, or 5" Storz	N/A	4-Way
BT 5221	-3H1PM	3 x 2.5"	1x 4" or 4.5" Nozzle. or 5" Storz	Yes	4-Way
BT 5221	-4H0P	4 x 2.5"	N/A	N/A	4-Way
BT 5221	-4H0PM	4 x 2.5"	N/A	Yes	4-Way
BT 5221	-2H2P	2 x 2.5"	2 x 4" or 4.5" Nozzle, or 5" Storz	N/A	4-Way
BT 5221	-2H2PM	2 x 2.5"	2 x 4" or 4.5" Nozzle, or 5" Storz	Yes	4-Way

BLAZETECH SYSTEMS LTD.

contact@blaze-tech.co.uk Milton Keynes, United Kingdom www.blaze-tech.co.uk

Disclaimer: Images shown are for illustration purposes only. Actual products may vary in appearance and specification. Specifications are subject to change without notice.

Ver. A, 15032026, © Blaze 2026

BLAZE

Dry Barrel Fire Hydrant

Model : BT 5221

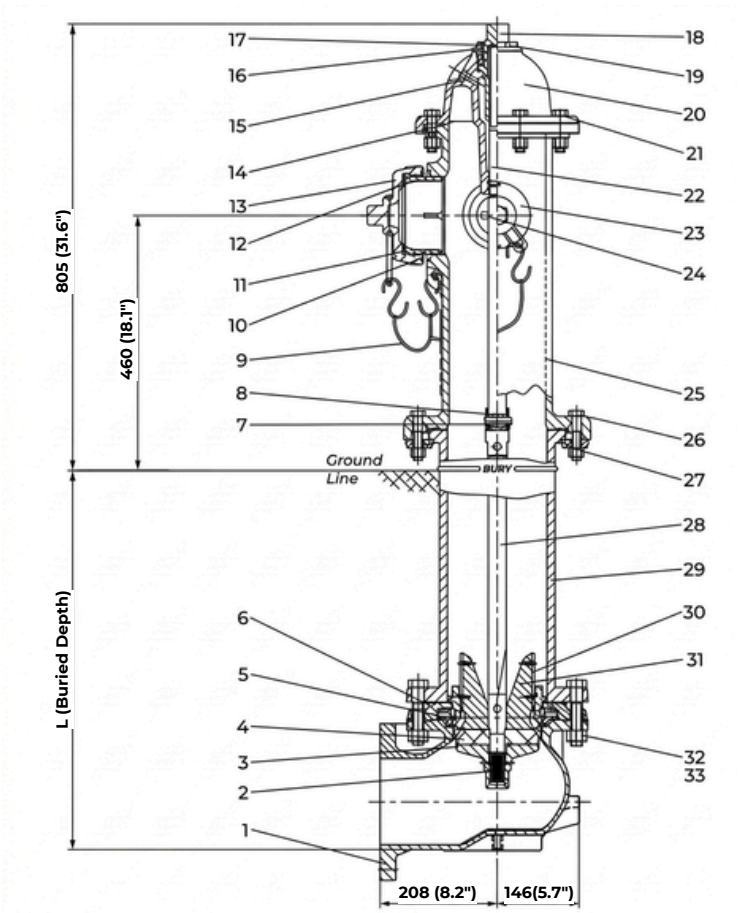

Material Specifications :

Item	Part Name	Material	ASTM Specification
1	Duck Foot Bend	Ductile Iron	A536 Grade 65-45-12
2	Nut	Ductile Iron	A536 Grade 65-45-12
3	Valve Bottom Plate	Ductile Iron	A536 Grade 65-45-12
4	Main Valve	Rubber	D2000 NBR
5	Seat Ring	Bronze	B62 C83600
6	Drain Ring Housing	Gray Cast Iron	A126 Class B
7	Clevis Pin	Stainless Steel	A276 Type 304
8	Safety Coupling	Stainless Steel	A890
9	Cap Chain	Carbon Steel	A105
10	Pumper Nozzle O-Ring	Rubber	D2000 NBR
11	Pumper Nozzle Gasket	Rubber	D2000 NBR
12	Pumper Nozzle	Bronze	B62 C83600
13	Pumper Nozzle Cap	Gray Cast Iron	A126 Class B
14	O-Ring	Rubber	D2000 NBR
15	Oil Plug	Brass	B124 C37700
16	O-Ring	Rubber	D2000 NBR
17	Scraper Seal	Rubber	D2000 NBR
18	Operating Nut	Bronze	B62 C83600
19	Hold Down Nut	Bronze	B62 C83600
20	Bonnet	Gray Cast Iron	A126 Class B -
21	Bolts and Nuts	Carbon Steel	A307 Grade B
22	Upper Rod	Carbon Steel	A576 Grade B
23	Hose Nozzle	Bronze	B62 C83600
24	Stem Pin	Stainless Steel	A276 Type 304
25	Standpipe Upper	Ductile Iron	A536 Grade 65-45-12
26	Bolts & Nuts	Carbon Steel	A307 Grade B
27	Safety Flange	Gray Cast Iron	A126 Class B
28	Lower Rod	Carbon Steel	A576 Grade B
29	Standpipe Lower	Ductile Iron	A536 Grade 65-45-12
30	Drain Valve Facing	Plastic	HDPE
31	Valve Top Plate	Bronze	B148 C95200
32	Bolt	Stainless Steel	F593 Grade 304
33	Nut	Stainless Steel	F594 Grade 316

BLAZETECH SYSTEMS LTD.

contact@blaze-tech.co.uk Milton Keynes, United Kingdom www.blaze-tech.co.uk

Disclaimer: Images shown are for illustration purposes only. Actual products may vary in appearance and specification. Specifications are subject to change without notice.

Ver. A, 15032026, © Blaze 2026

Dry Barrel Fire Hydrant

Model : BT 5221

Receiving and Storage :

Inspect the hydrant upon receipt to ensure that no damage has occurred during transportation. Operate the hydrant through one complete open and close cycle to verify smooth operation and confirm that all internal components are intact.
Before installation, carry out a pressure and leakage test, as nozzles and other fasteners may become loose during transit. Once testing is complete, fully close the main valve and securely tighten all nozzle caps.
If the hydrant is to be stored before installation, position it with the inlet flange facing downwards in a clean, dry location. Reinspect the hydrant immediately before installation to ensure it remains in good condition.
Refer to the Hydrant Installation Detail for the recommended installation arrangement.

Installation :

1. Install the hydrant in accordance with local fire codes, municipal regulations and recognised industry standards.
2. Position the hydrant vertically and ensure it is securely supported on a solid foundation or concrete base.
3. Install a hydrant gate valve between the hydrant and the water main to allow isolation for maintenance and emergency servicing.
4. Position the hydrant as close to the water main as practical and maintain the required clearance from kerbs, roads and surrounding obstructions.
5. Orient the pumper outlet towards the roadway or designated access point to allow easy connection by firefighting equipment.
6. Ensure the operating nut is positioned at least 460 mm (18 in.) above ground level for safe and convenient operation.
7. Remove all dirt and foreign material from the hydrant lead and pipework before installation.
8. Provide adequate thrust restraint or joint restraint to prevent movement caused by water pressure.
9. Do not block the hydrant drain outlets when constructing thrust blocks.
10. In areas with a high groundwater level, plug the drain outlets where required and ensure the hydrant is drained after each use to prevent freezing.
11. Do not connect hydrant drains to sanitary or storm drainage systems.
12. For installations on existing water mains, disinfect the hydrant and connecting pipework before placing the unit into service.
13. After installation, pressure test the hydrant and associated pipework in accordance with the applicable local standards and project specifications.

Maintenance and Repair :

1. Close the hydrant gate valve to isolate the hydrant from the water supply.
2. Remove one hose nozzle cap and open the hydrant approximately three turns to relieve any residual pressure.
3. Remove the hold-down nut, operating nut and anti-friction washer.
4. Apply a suitable silicone-based lubricant to the upper rod and protective sleeve before removing the bonnet.
5. Remove the bonnet assembly and inspect the bonnet O-ring. Replace if damaged.
6. Remove the rod assembly using the appropriate seat wrench.
7. Disassemble the main valve assembly and inspect all components for wear, corrosion or damage. Replace defective parts as required.
8. Inspect the drain valve facings, seat ring and O-rings. Replace any worn or damaged seals and lubricate all O-rings before reassembly.
9. Reassemble the valve components in the reverse order of disassembly, ensuring all fasteners are tightened to the recommended torque.
10. Carefully reinstall the rod assembly into the hydrant barrel, taking care not to damage the O-rings.
11. Refit the bonnet, operating nut, hold-down nut and anti-friction washer, replacing any damaged O-rings.
12. With the hydrant in the fully closed position, refill the operating chamber with the recommended lubricant to the correct level.
13. Return the hydrant to service and carry out a functional and leakage test to verify correct operation.

Nozzle Replacement :

1. Remove the hose nozzle cap and the nozzle lock key using the appropriate removal tool.
2. Fit the nozzle wrench and loosen the nozzle by turning it clockwise (left-hand thread).
3. Install the new nozzle with a new O-ring, then tighten it by turning counter-clockwise to the recommended torque.
4. Refit the nozzle lock key, ensuring it is correctly centred.
5. Perform a pressure and leakage test to confirm correct installation.

BLAZETECH SYSTEMS LTD.
contact@blaze-tech.co.uk Milton Keynes, United Kingdom www.blaze-tech.co.uk

Disclaimer: Images shown are for illustration purposes only. Actual products may vary in appearance and specification. Specifications are subject to change without notice.

PRECISION YOU CAN TRUST
Ver. A, 15032026, © Blaze 2026

Dry Barrel Fire Hydrant

Model : BT 5221

Safety Flange Repair Kit Installation :

1. Isolate the hydrant and remove the operating nut, hold-down nut, bonnet and damaged safety flange components.
2. Remove the damaged safety stem coupling, clevis pins and cotter pins. Discard all used pins.
3. Inspect the lower barrel and remove any broken components or debris.
4. Install the new safety stem coupling using the supplied clevis and cotter pins, ensuring the arrow points upwards.
5. Reconnect the upper and lower stems and position the new flange gasket/O-ring.
6. Reassemble the upper barrel and install the new safety flange halves, tightening all bolts securely.
7. Refit the bonnet with a new gasket/O-ring, then reinstall the operating nut, anti-friction washer and hold-down nut.
8. Fill the bonnet chamber with the recommended lubricant and replace the oil plug.
9. Tighten all fasteners, bleed trapped air from the hydrant and perform a pressure and leakage test before returning the hydrant to service.

Hydrant Extension Kit Installation :

1. Remove the operating nut, hold-down nut, bonnet and upper barrel assembly. Remove the safety flange and disconnect the upper stem assembly from the lower stem.
2. Assemble the extension stem and extension coupling using the supplied clevis and cotter pins.
3. Connect the extension stem assembly to the lower stem and position a new flange gasket or O-ring on the lower barrel.
4. Install the extension barrel onto the lower barrel and secure it with the supplied flange halves and bolts.
5. Reconnect the upper stem assembly to the extension stem using the original clevis and cotter pins.
6. Position a new flange gasket or O-ring, reinstall the upper barrel and secure it using the safety flange assembly.
7. Refit the bonnet, operating nut, anti-friction washer and hold-down nut, ensuring all O-rings are correctly positioned and lubricated.
8. Fill the bonnet chamber with the recommended lubricant and replace the oil filler plug.
9. Tighten all fasteners securely, bleed trapped air from the hydrant and carry out a pressure and leakage test before returning the hydrant to service.

BLAZETECH SYSTEMS LTD.

contact@blaze-tech.co.uk Milton Keynes, United Kingdom www.blaze-tech.co.uk

Disclaimer: Images shown are for illustration purposes only. Actual products may vary in appearance and specification. Specifications are subject to change without notice.

Ver. A, 15032026, © Blaze 2026