BLAZE

Wet Barrel Fire Hydrant

Model : BT 5222 / 5223

Description:

The BT 5222 / BT 5223 Wet Barrel Fire Hydrant is designed to provide a reliable and readily available water supply for firefighting operations. Suitable for areas where freezing temperatures are not a concern, the hydrant keeps water within the barrel at all times for quick and easy access during emergencies.
Manufactured to meet AWWA C503 requirements, the hydrant offers excellent flow performance, durable construction, and dependable operation. It is available in a range of outlet configurations, including monitor options, making it suitable for municipal, industrial, commercial, and infrastructure fire protection systems.

Specifications:

- Meets or Exceeds the Requirements of AWWA C503 Standard.
- NFPA 1963 Standard Nozzle Threads.
- Excellent Flow Characteristics.
- Multiple Nozzle Configurations.
- Inlet Flange to ASME B16.1 Class 125, size 6in.
- Rated Working Pressure 250 psi.
- UL 246 Listed and FM 1511 Approved.
- Fusion Bonded Epoxy Coated Interior and Exterior to AWWA C550 Standard.

Options:

- Monitor Style available.
- Monitor Flange: ASME B16.1 Class 125, Size 4".

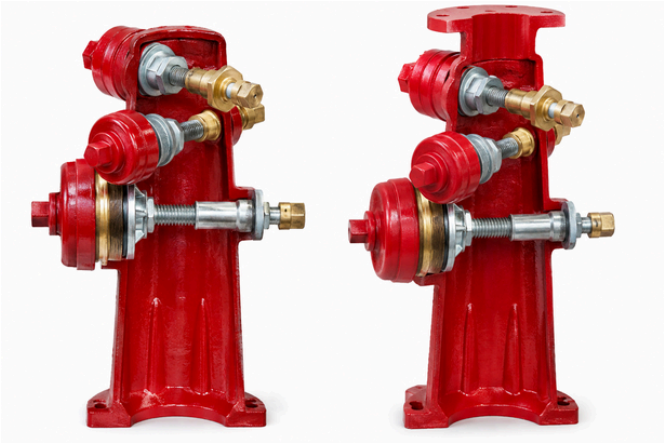

Fig. BT 5223

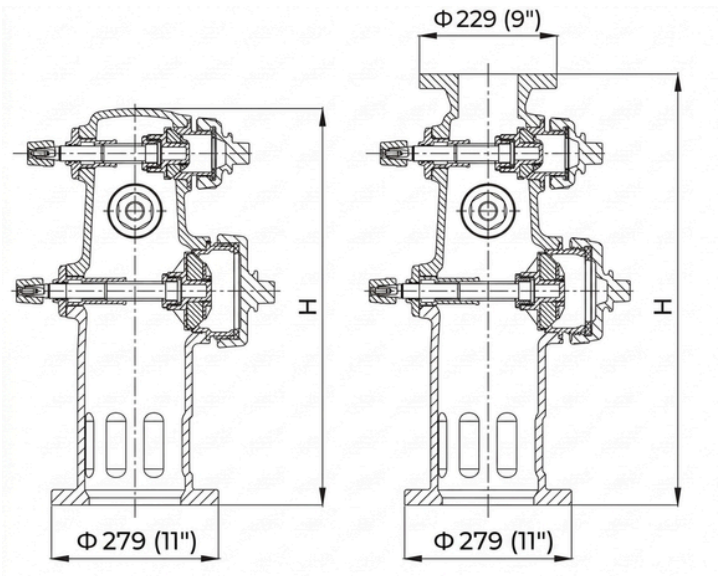

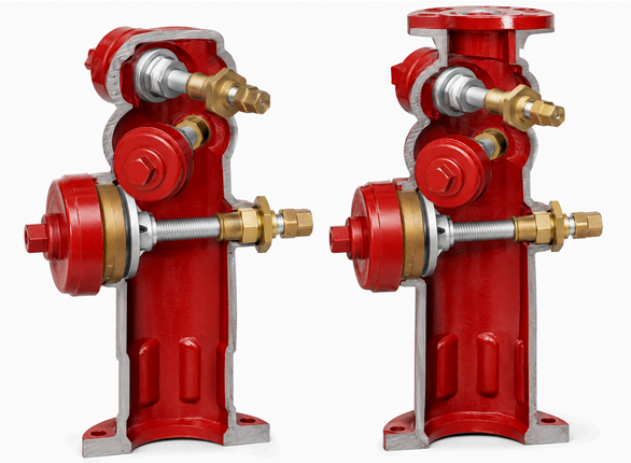

Fig. BT 5222

Options :

Model	Connections	Hose outlet	Pumper Nozzle Style	Monitor	Way	H (mm/inch)
BT 5223	-2H0P	2 x 2.5"	N/A	N/A	2-Way	572 / 22.5"
BT 5223	-2H0PM	2 x 2.5"	N/A	Yes	2-Way	629 / 24.8"
BT 5223	-1H1P	1 x 2.5"	1 x 4" or 4.5" Nozzle, or 5" Storz	N/A	2-Way	572 / 22.5"
BT 5223	-1H1PM	1 x 2.5"	1 x 4" or 4.5" Nozzle, or 5" Storz	Yes	2-Way	629 / 24.8"
BT 5222 / 5223	-2H1P	2 x 2.5"	1 x 4" or 4.5" Nozzle, or 5" Storz	N/A	3-Way	663 / 26.1"
BT 5222 / 5223	-2H1PM	2 x 2.5"	1 x 4" or 4.5" Nozzle, or 5" Storz	Yes	3-Way	721 / 28.4"

BLAZETECH SYSTEMS LTD.

contact@blaze-tech.co.uk Milton Keynes, United Kingdom www.blaze-tech.co.uk

Disclaimer: Images shown are for illustration purposes only. Actual products may vary in appearance and specification. Specifications are subject to change without notice.

Ver. A, 15032026, © Blaze 2026

BLAZE

Wet Barrel Fire Hydrant

Model : BT 5222 / 5223

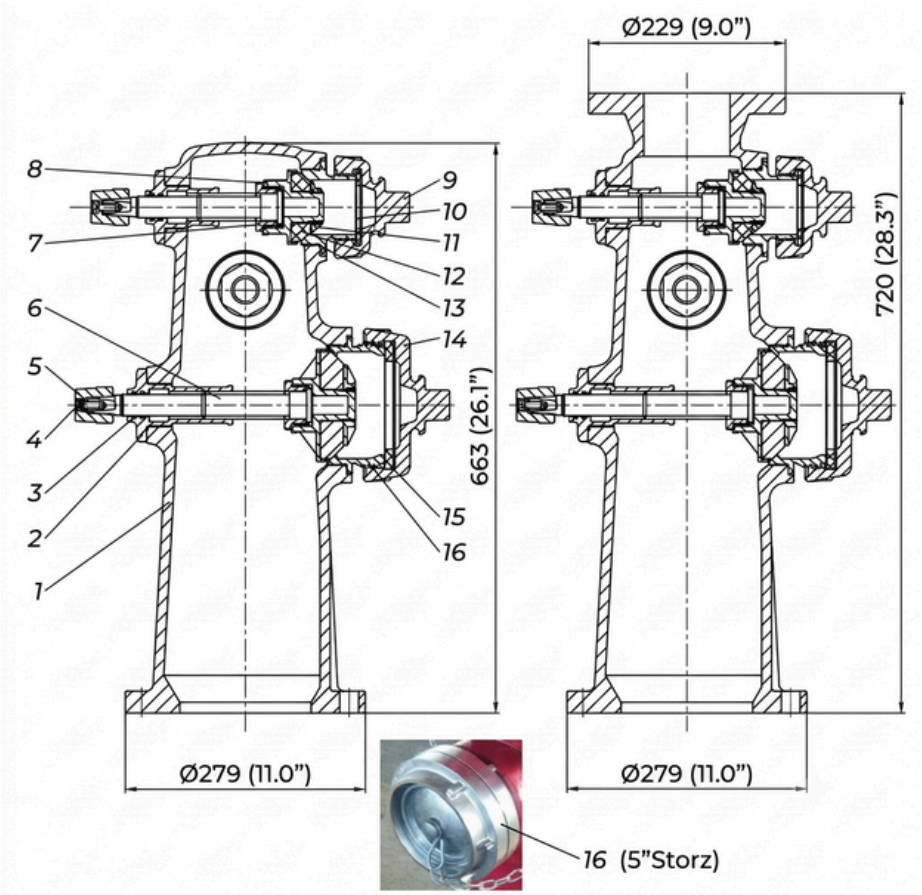

Material Specifications :

Item	Part Name	Material	ASTM Specification
1	Body	Ductile Iron	A536 Grade 65-45-12
2	Stem Nut	Bronze	B62 C83600
3	O-Ring	Rubber	D2000 NBR
4	Bolt	Stainless Steel	F593 Grade 304
5	Operating Nut	Bronze	B62 C83600
6	Stem	Stainless Steel	A276 Type 304
7	Holder Nut	Bronze	B62 C83600 -
8	Holder	Stainless Steel	A351 Grade CF8
9	Hose Nozzle Cap 2.5"	Gray Cast Iron	A126 Class B
10	Hose Nozzle Gasket	Rubber	D2000 NBR
11	Retainer	Bronze	B62 C83600
12	Disc	Rubber	D2000 NBR
13	Hose Nozzle 2.5"	Bronze	B62 C83600

Item	Part Name	Material	ASTM Specification
14	Pumper Nozzle Cap 4" / 4.5"	Gray Cast Iron	A126 Class B
15	Pumper Nozzle Gasket	Rubber	D2000 NBR
16 (Options)	Pumper Nozzle 4" / 4.5"	Bronze	B62 C83600
	Pumper Nozzle 5" Storz	Aluminum Alloy	ASTM B26

BLAZETECH SYSTEMS LTD.

contact@blaze-tech.co.uk Milton Keynes, United Kingdom www.blaze-tech.co.uk

Disclaimer: Images shown are for illustration purposes only. Actual products may vary in appearance and specification. Specifications are subject to change without notice.

Ver. A, 15032026, © Blaze 2026

Wet Barrel Fire Hydrant

Model : BT 5222 / 5223

Inspection :

Upon receipt, inspect the hydrant to ensure it complies with the specified order and project requirements.

- Verify the correct hydrant model, outlet size and flange drilling pattern.
- Operate each valve through one complete open-and-close cycle to confirm smooth operation and to ensure no damage has occurred during transportation.
- Check that all external bolts, nuts and fasteners are securely tightened.
- Inspect the inlet flange cover for damage. If the cover has been removed or damaged, examine the interior of the hydrant through the inlet opening to ensure it is clean and free from dirt or foreign material.
- Refit the inlet flange cover and keep it in place until the hydrant is ready for installation.

Installation :

Select the hydrant location carefully to ensure safe operation, easy access and minimal maintenance throughout its service life.

- Install the hydrant in a location protected from vehicle impact and other potential hazards. Where local regulations do not specify a setback distance, a minimum clearance of 600 mm (2 ft) from the face of the kerb is recommended. In rural areas, provide sufficient clearance while maintaining easy access for firefighting equipment.
- Connect the hydrant to a water main capable of supplying the required fire flow. Install an isolation valve between the hydrant and the water main to facilitate future maintenance.
- Install the hydrant in a vertical (plumb) position and ensure adequate clearance around the bury flange for maintenance access.
- Position the pumper outlet facing the roadway and ensure that no signs, lighting columns or other obstructions restrict access to the hydrant or its outlets.
- After installation, thoroughly flush the hydrant to remove debris and any disinfectant residue from the pipework.
- Ensure all nozzle caps are securely tightened and confirm that the isolation valve is fully open before placing the hydrant into service.
- Record the installation details, including the hydrant location, isolation valve location, installation date, hydrant model, outlet sizes and, where available, flow test results.

Testing :

Pressure Testing at Main Line Pressure:

1. Carry out a pressure test after maintenance or installation to ensure the hydrant is free from leaks.
2. With the isolation valve closed, remove the top nozzle cap and slightly open the top outlet valve.
3. Slowly open the isolation valve to allow trapped air to escape through the open nozzle.
4. Once a steady flow of water is observed, close the outlet valve and fully open the isolation valve.

Caution: Trapped air can become compressed and present a safety hazard. Ensure all air is vented before pressurising the system.

5. With the hydrant pressurised to the main line pressure, inspect the flange joint, outlet nozzles, valve seats and stem seals for any signs of leakage.
6. If any leaks are detected, repair or replace the defective components and repeat the pressure test until the hydrant is confirmed to be leak-free.

Pressure Testing at Pressures Above Main Line Pressure:

The following procedure is used to pressure test the hydrant above the normal main line pressure to verify leak-free performance at its rated working pressure.

1. Remove all nozzle caps and connect a suitable hydrostatic test pump to one of the outlet nozzles.
2. Slightly open the top outlet valve to release any trapped air. Close the valve once a steady flow of water is observed.
3. Close the isolation valve to isolate the hydrant and open the outlet valve connected to the test pump.
4. Increase the pressure gradually to the required test pressure in accordance with the test pump manufacturer's instructions.
5. Caution: Ensure all trapped air has been removed before pressurising the hydrant, as compressed air may present a safety hazard.
6. Inspect the hydrant for leakage around the flange joint, outlet nozzles, valve seats and stem seals.
7. If any leakage is detected, repair or replace the defective components and repeat the pressure test until the hydrant is confirmed to be leak-free.
8. Close the test pump outlet valve, reopen the isolation valve, and return the hydrant to normal service.

Disclaimer: Images shown are for illustration purposes only. Actual products may vary in appearance and specification. Specifications are subject to change without notice.

PRECISION YOU CAN TRUST

Ver. A, 15032026, © Blaze 2026

Maintenance :

To ensure reliable operation, the hydrant should be inspected and maintained at least once a year. Maintain a record of all inspections, maintenance activities and any corrective actions taken.

1. Inspect the inlet flange, outlet nozzles, valve seats and stem seals for leaks. Tighten loose components or replace defective parts if necessary.
2. Check the nozzle caps, cap chains and cap rings for damage and ensure they rotate freely.
3. Inspect outlet nozzle threads for wear or debris. Clean the threads and apply a suitable non-toxic anti-seize compound if required.
4. Examine the external coating for signs of damage or corrosion and repair any exposed metal surfaces.
5. Close the isolation valve and operate each hydrant valve through two complete open-and-close cycles to ensure smooth operation.
6. Inspect the valve disc for excessive wear or damage. Replace any worn components as required.
7. Restore the water supply slowly and vent all trapped air before returning the hydrant to service.
8. Flush each outlet through a hose or diffuser to remove debris and verify correct operation.
9. Securely tighten all nozzle caps and ensure the isolation valve is fully open.
10. Record the inspection results and any maintenance carried out before returning the hydrant to normal service.

BLAZETECH SYSTEMS LTD.

contact@blaze-tech.co.uk Milton Keynes, United Kingdom www.blaze-tech.co.uk

Disclaimer: Images shown are for illustration purposes only. Actual products may vary in appearance and specification. Specifications are subject to change without notice.

Ver. A, 15032026, © Blaze 2026