BLAZE

Swing Check Valve - Flanged

Model : BT 5301

Description:

The BT 5301 Swing Check Valve is designed to prevent reverse flow in fire protection and water distribution systems. The valve operates automatically, allowing unrestricted forward flow while preventing backflow to protect pumps, pipelines and associated equipment. Its full waterway design minimises pressure loss, while the EPDM-encapsulated disc provides reliable sealing and long service life. The top-entry bonnet enables easy inspection and maintenance without removing the valve from the pipeline, reducing downtime and maintenance costs.

Features :

- EPDM Encapsulated Disc
- An advanced design featuring exceptionally low pressure loss at high flow rates
- The valve can be dismantled without removing it from the piping system by unscrewing the bonnet bolts.
- Face to face dimensions according to ASME B16.10.

Specifications:

Size	DN 50 to DN 400 (2"- 16")
Maximum Working Pressure	24.13 bar (350 psi)
Temperature Range	0° C to 80°C (32°F to 176°F)
Approvals	FM 1210 Approved, UL 312 Listed
Design Standard	Meets or Exceeds AWWA C508 Standard
Coating	FBE Coating in accordance with ANSI/AWWA C550. Average Coating Thickness 250 Microns
Flange	Standard Supply ANSI Class 150 RF
	*ANSI B16.1 CLASS125/PN16 - Optional

Dimensions:

Order Code	INCH	L (mm / Inch)	H (mm / Inch)
BT-5301-050-350-RF	2"	209/8.2"	104/4.1"
BT-5301-065-350-RF	2½"	226/8.9"	112/4.4"
BT-5301-080-350-RF	3"	251/9.9"	124/4.9"
BT-5301-100-350-RF	4"	292/11.5"	157/6.2"
BT-5301-125-350-RF	5"	330/13.0"	195/7.7"
BT-5301-150-350-RF	6"	356/14.0"	207/8.1"
BT-5301-200-350-RF	8"	495/19.5"	264/10.4"
BT-5301-250-350-RF	10"	622/24.5"	304/12.0"
BT-5301-300-350-RF	12"	699/27.5"	355/14.0"
BT-5301-350-350-RF	14"	787/31.0"	405/15.9"
BT-5301-400-350-RF	16"	914/36.0"	447/17.6"

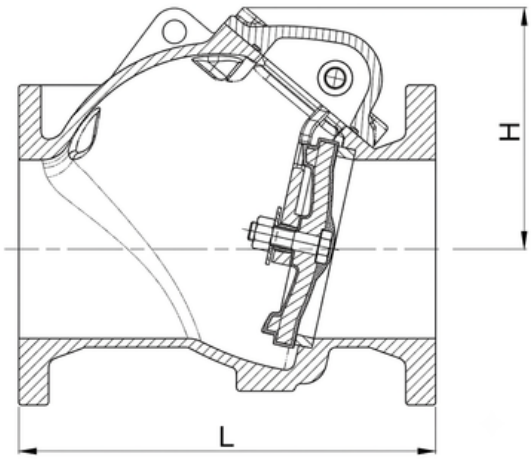

BLAZETECH SYSTEMS LTD.

contact@blaze-tech.co.uk Milton Keynes, United Kingdom www.blaze-tech.co.uk

Disclaimer: Images shown are for illustration purposes only. Actual products may vary in appearance and specification. Specifications are subject to change without notice.

PRECISION YOU CAN TRUST

Ver. A, 15032026, © Blaze 2026

BLAZE

Swing Check Valve - Flanged

Model : BT 5301

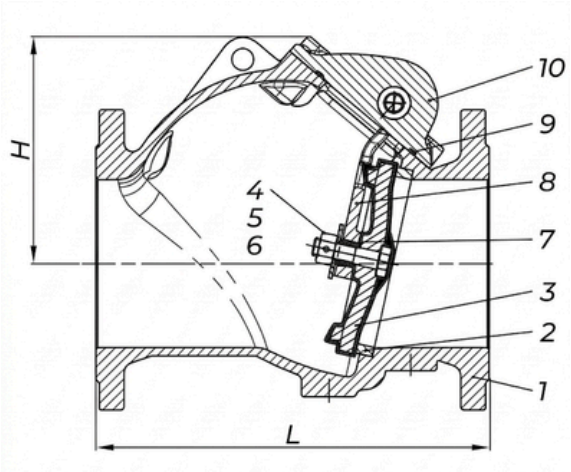

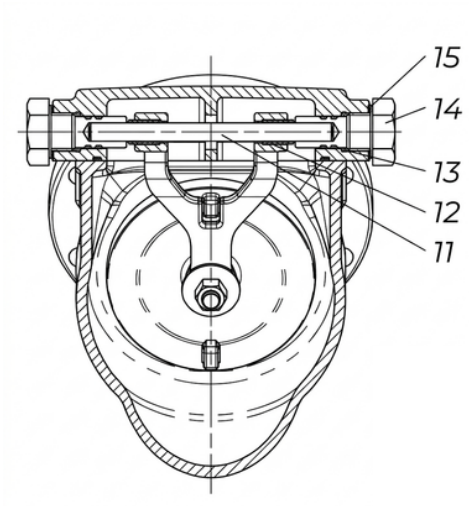

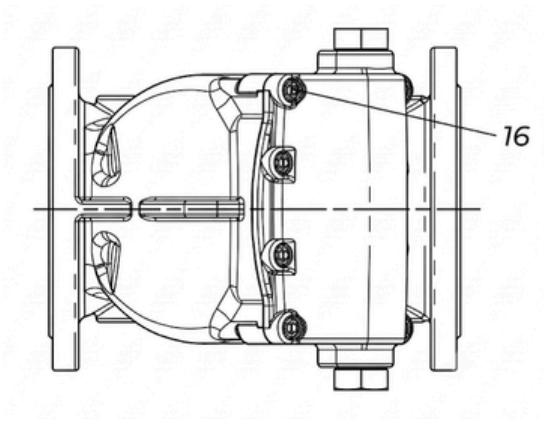

Material Specification :

Item	Part Name	Material	ASTM Specification
1	Body	Ductile Iron	A536 Grade 65-45-12
2	Body Seat	Bronze	B62 C83600
3	Disc	Ductile Iron with EPDM Full Encapsulated	
4	Connecting Stem	Stainless Steel	A276 Type 316
5	Locking Nut	Stainless Steel	A276 Type 304
6	Washer	Stainless Steel	A276 Type 304
7	Bushing	Stainless Steel	A276 Type 304
8	Hinge 2"–6"	Stainless Steel	A351 Grade CF8
	Hinge 8"–16"	Ductile Iron	A536 Grade 65-45-12
9	Gasket	Rubber	D2000 EPDM
10	Bonnet	Ductile Iron	A536 Grade 65-45-12
11	Hinge Pin	Stainless Steel	A276 Type 304
12	Shaft Bushing	Bronze	B148 C95200
13	O-Ring	Rubber	D2000 NBR
14	Locating Sleeve	Stainless Steel	A276 Type 304
15	Washer	Red Copper	
16	Screw	Carbon Steel	A307 Class B

BLAZETECH SYSTEMS LTD.

contact@blaze-tech.co.uk Milton Keynes, United Kingdom www.blaze-tech.co.uk

Disclaimer: Images shown are for illustration purposes only. Actual products may vary in appearance and specification. Specifications are subject to change without notice.

Ver. A, 15032026, © Blaze 2026

Swing Check Valve - Flanged

Model : BT 5301

Installation:

Ensure that the direction arrow on the check valve body is aligned with the water flow. Flanged swing check valves may be installed horizontally or vertically; however, for vertical installations, the water must flow upwards only. For easier handling, large size valves 4" to 16" are equipped with lifting eye bolts.

Pressure Loss V/s Flow :

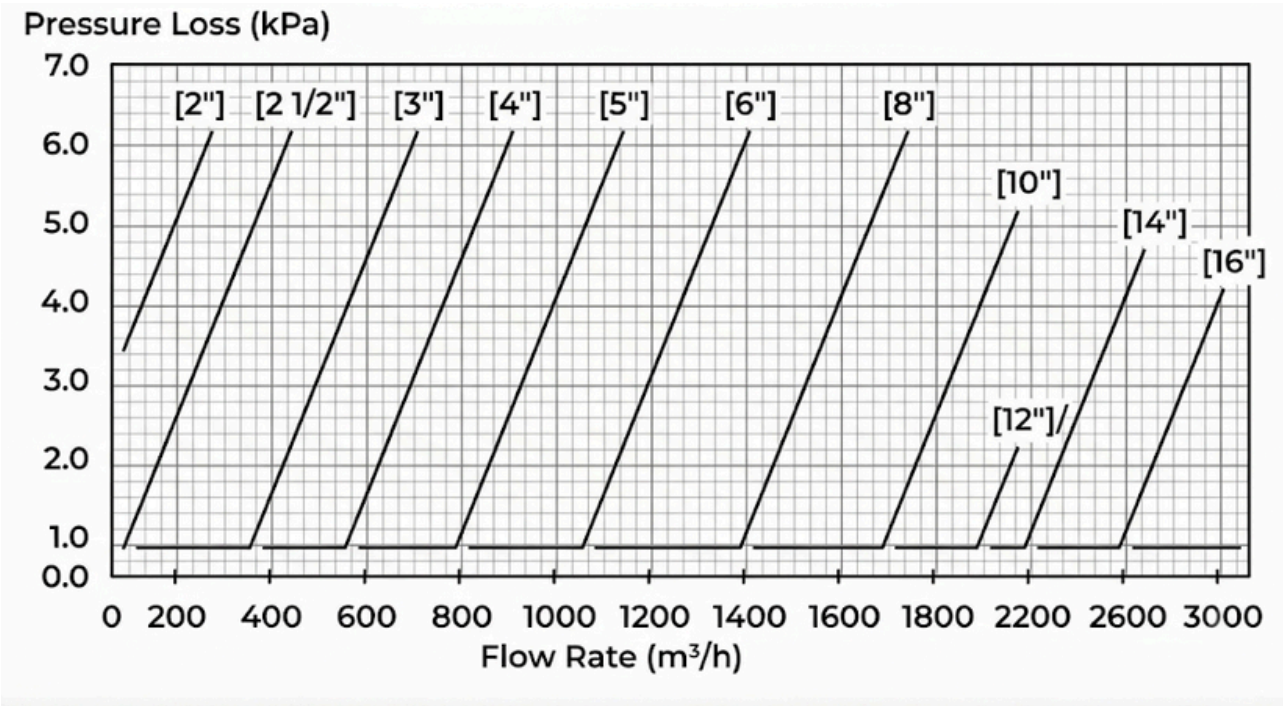

Disclaimer: Images shown are for illustration purposes only. Actual products may vary in appearance and specification. Specifications are subject to change without notice.

PRECISION YOU CAN TRUST

Ver. A, 15032026, © Blaze 2026