BLAZE

Swing Check Valve - Grooved

Model : BT 5302

Description:

Grooved swing-type check valves with a rubber faced clapper allow water to flow in one direction only. The hinged clapper opens automatically when water begins to flow and closes when the flow stops, preventing any backflow. These valves are suitable for installation in both horizontal and vertical positions, provided that vertical installations have upward flow.

Features :

- EPDM Encapsulated Disc
- Bronze Seat Ring
- An advanced design featuring exceptionally low pressure loss at high flow rates
- Spring loaded for fast closure.

Specifications:

Size	DN 50 to DN 300 (2"- 12")
Maximum Working Pressure	20.7 bar (300 psi)
Temperature Range	0° C to 80°C (32°F to 176°F)
Approvals	FM 1210 Approved, UL 312 Listed
End Connections	Grooved Ends to AWWA C606 Standard.
Design Standard	Meets or Exceeds AWWA C508 Standard
Coating	FBE Coating in accordance with ANSI/AWWA C550. Average Coating Thickness 250 Microns

Dimensions:

Order Code	INCH	L (mm / Inch)	H (mm / Inch)
BT-5302-050-300-GG	2"	190/7.5"	66/2.5"
BT-5302-065-300-GG	2.5"	203/8.0"	75/3.0"
BT-5302-080-300-GG	3"	213/8.38"	90/3.5"
BT-5302-100-300-GG	4"	245/9.65"	105/4.0"
BT-5302-125-300-GG	5"	267/10.5"	115/4.5"
BT-5302-150-300-GG	6"	292/11.5"	140/5.5"
BT-5302-200-300-GG	8"	356/14.0"	225/8.9"
BT-5302-250-300-GG	10"	432/17.0"	260/10.2"
BT-5302-300-300-GG	12"	495/19.5"	285/11.2"

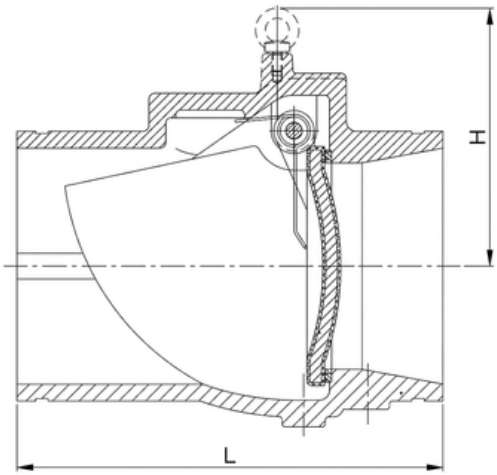

BLAZETECH SYSTEMS LTD.

contact@blaze-tech.co.uk Milton Keynes, United Kingdom www.blaze-tech.co.uk

Disclaimer: Images shown are for illustration purposes only. Actual products may vary in appearance and specification. Specifications are subject to change without notice.

PRECISION YOU CAN TRUST

Ver. A, 15032026, © Blaze 2026

BLAZE

Swing Check Valve - Grooved

Model : BT 5302

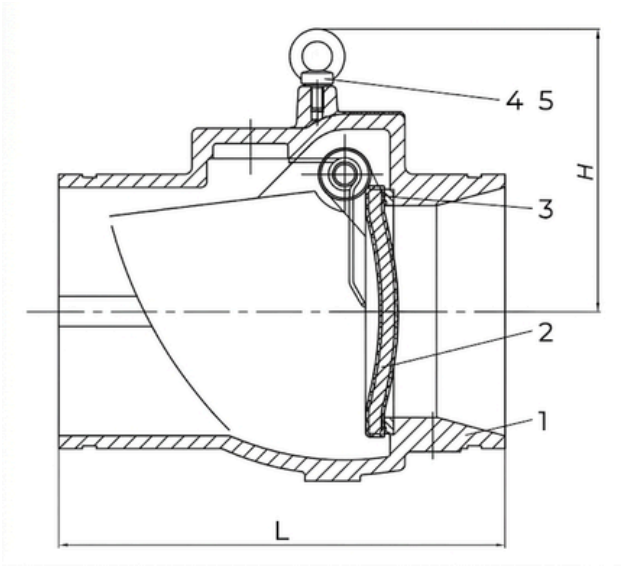

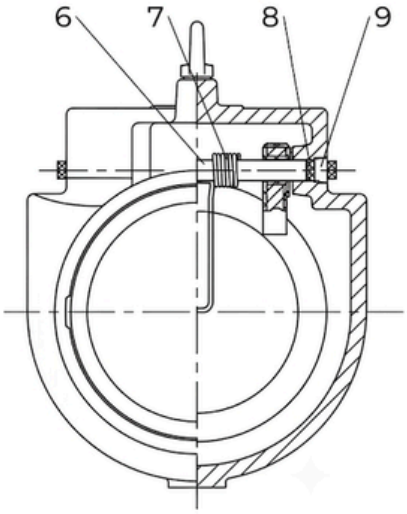

Material Specification :

Item	Part Name	Material	ASTM Specification
1	Body	Ductile Iron	A536 Grade 65-45-12
2	Disc	EPDM Fully Encapsulated Ductile Iron	
3	Body Seat Ring	Bronze	B62 C83600
4	Washer	Stainless Steel	A276 Type 304
5	Eyebolt	Carbon Steel	A307 Grade B
6	Stem	Stainless Steel	A276 Type 304
7	Spring	Stainless Steel	A276 Type 304
8	Plug Sealing	Rubber EPDM	D2000
9	Hinge Pin Plug	Stainless Steel	A276 Type 304

BLAZETECH SYSTEMS LTD.

contact@blaze-tech.co.uk Milton Keynes, United Kingdom www.blaze-tech.co.uk

Disclaimer: Images shown are for illustration purposes only. Actual products may vary in appearance and specification. Specifications are subject to change without notice.

Ver. A, 15032026, © Blaze 2026

Swing Check Valve - Grooved

Model : BT 5302

Installation:

Ensure that the direction arrow on the check valve body is aligned with the water flow. Grooved swing check valves may be installed horizontally or vertically; however, for vertical installations, the water must flow upwards only. For easier handling, large size valves 4" to 12" are equipped with lifting eye bolts.

Pressure Loss V/s Flow :

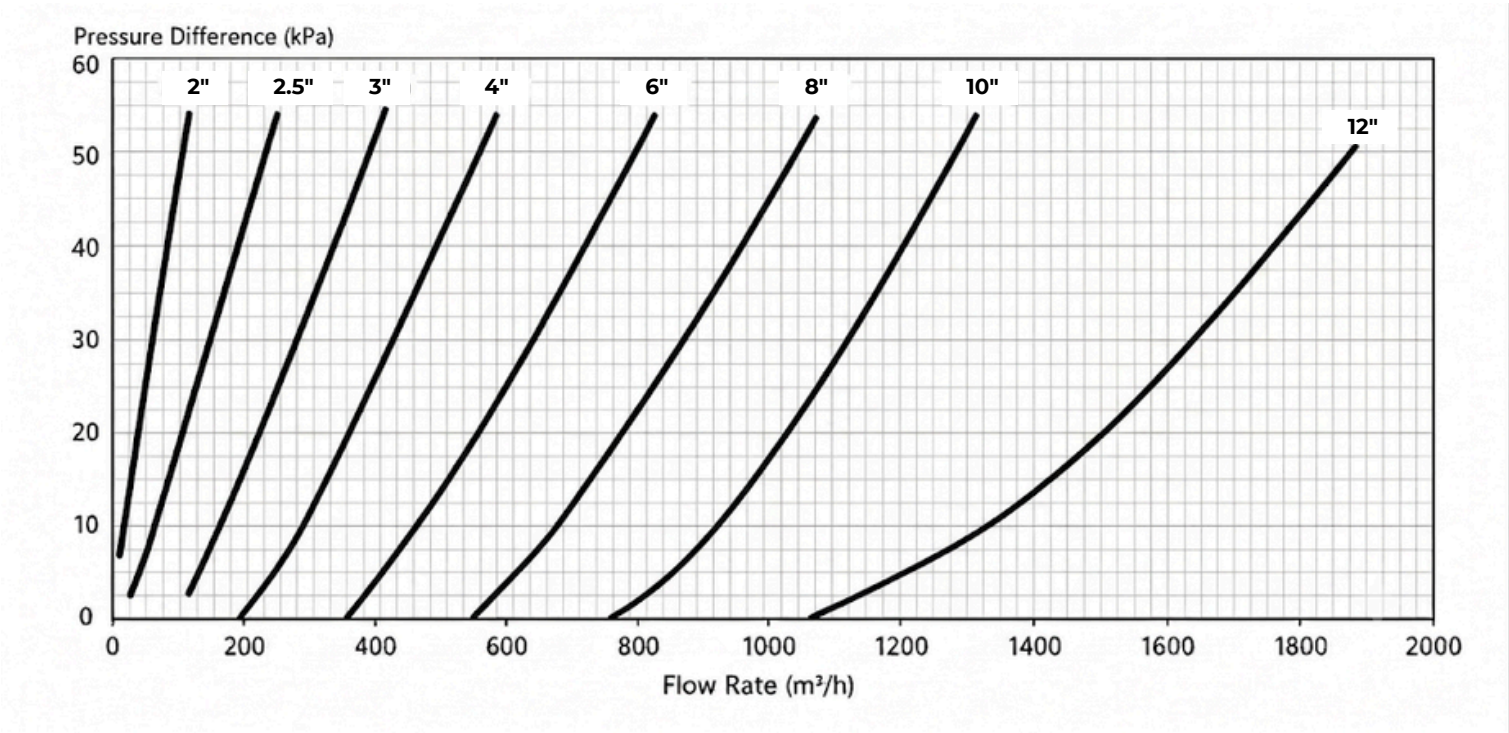

Disclaimer: Images shown are for illustration purposes only. Actual products may vary in appearance and specification. Specifications are subject to change without notice.

Ver. A, 15032026, © Blaze 2026