BLAZE

Horizontal Sidewall Sprinkler K8.0(115)

Model : BL 5615 / BL 5616

Description:

The Horizontal Sidewall Sprinkler Models, including models BL 5615 (Standard Response) and BL 5616 (Quick Response), are designed in accordance with UL 199 standards. These sprinklers are specifically designed for horizontal sidewall installation, with recessed installation available using recessed escutcheon plates providing up to ¾ in. (19 mm) horizontal adjustment. Featuring a larger-orifice K8.0 design and specially engineered sidewall deflectors, the series provides broad and uniform water distribution for reliable coverage. Available in multiple temperature ratings and finish options, the series features a robust cast body and frame for reliable performance and durability, making it suitable for a wide range of light and ordinary hazard fire protection applications.

Specifications :

Model	BL 5615 (S.R.) BL 5616 (Q.R.)
K-Factor	8.0 (115)
Nominal Thread Size	3/4" NPT
Maximum Tightening Torque	21 ft-lbs (28.6 Nm)
Maximum Working Pressure	175 PSI (12 Bar)
Factory Hydrostatic Test	100% tested at 500 PSI (34.50 Bar)
Temperature Range	57°C - 93°C (135°F - 200°F)

Temperature Rating Table:

Spinkler SIN	Temperature Rating °F (°C)	NFPA Allowed Maximum Ambient (Ceiling) Temperature	Glass Bulb Color
BL 5615 BL 5616	135°F / 57°C	100°F / 38°C	Orange
	155°F / 68°C		Red
	175°F / 79°C	150°F / 65°C	Yellow
	200°F / 93°C		Green

Material Specifications :

Frame	Brass
Deflector	Brass
Cap	Copper
Load Screw	Brass
Bulb	Glass
Spring Seal	Beryllium Nickel w/TEFLON
Finishes	Natural Brass / Chrome Plated / Polyester Coated

BLAZETECH SYSTEMS LTD.

contact@blaze-tech.co.uk Milton Keynes, United Kingdom www.blaze-tech.co.uk

Disclaimer: Images shown are for illustration purposes only. Actual products may vary in appearance and specification. Specifications are subject to change without notice.

PRECISION YOU CAN TRUST

Ver. A, 01082026, © Blaze 2026

Horizontal Sidewall Sprinkler K8.0(115)

Model : BL 5615 / BL 5616

Installation Requirements :

All Sprinklers shall be installed in accordance with NFPA 13 and all applicable local codes, regulations and standards. Any deviation from these requirements, including unauthorised modification of the sprinkler, will invalidate all warranties provided by Blazetech Systems Ltd.

The sprinkler system pipework shall be correctly sized to ensure the required flow rate is delivered to each sprinkler. Before installation, verify that the correct sprinkler model, style, orifice size and temperature rating have been selected for the application. Sprinklers should only be installed after the pipework has been completed to minimise the risk of mechanical damage. Any sprinkler found to be damaged must be replaced immediately.

Wet pipe systems must be adequately protected against freezing conditions. Following installation, the complete system shall be tested in accordance with the relevant recognised standards. If leakage occurs at the threaded connection, remove the sprinkler, apply a suitable pipe joint compound or PTFE thread seal tape, and reinstall the sprinkler correctly.

Installation Instructions :

1. Install the sprinkler in the correct orientation. Extended Coverage Horizontal Sidewall and Recessed Extended Coverage Horizontal Sidewall Sprinklers must be installed in the horizontal position, with the deflector facing upwards and parallel to the ceiling.
2. Apply only a non-hardening pipe joint compound or PTFE thread seal tape to the male threads of the sprinkler. Do not apply sealant to the female threads.
3. Hand-tighten the sprinkler into the fitting to ensure correct thread engagement.
4. Using the designated Sprinkler Wrench, tighten the sprinkler to form a leak-tight joint.
   - Recommended tightening torque: 7–14 ft-lb (9.5–19.0 N·m).
   - Do not exceed 21 ft-lb (28.6 N·m), as excessive torque may deform the spring seal, resulting in permanent damage or leakage.
   - For exposed pipework installations, ensure the sprinkler frame arms are aligned parallel to the branch pipe.

Warning

- All Sprinklers must be installed and maintained strictly in accordance with the instructions provided in this datasheet.
- Before installing, removing or adjusting any sprinkler, ensure that the piping system is fully depressurised and drained. Failure to follow this precaution may impair sprinkler performance and compromise the integrity of the fire protection system.
- It is the responsibility of the building owner or system operator to ensure that the fire protection system and all associated components are properly inspected, maintained and kept in reliable operating condition at all times.

Caution

- Do not over-tighten or under-tighten the sprinkler to compensate for misaligned or incorrectly fitted escutcheon plates, as this may damage the sprinkler or impair its performance.
- Protective clips are fitted to safeguard the glass bulb during transportation and installation. These clips must remain in place until installation is complete to prevent accidental damage to the sprinkler.

Maintenance :

Sprinklers must never be modified after manufacture. Any alteration, including painting, plating, coating or other surface treatments, may impair sprinkler performance and could prevent correct operation in the event of a fire.

Any sprinkler exposed to corrosive conditions should be replaced if it cannot be thoroughly cleaned. A visual inspection is recommended immediately after installation, with a detailed inspection carried out at least once every year thereafter.

The inspection, testing and maintenance of the fire protection system are the responsibility of the building owner or system operator. Automatic sprinkler systems should be maintained in accordance with all applicable local and national codes, standards and regulations.

BLAZETECH SYSTEMS LTD.

contact@blaze-tech.co.uk Milton Keynes, United Kingdom www.blaze-tech.co.uk

Disclaimer: Images shown are for illustration purposes only. Actual products may vary in appearance and specification. Specifications are subject to change without notice.

Ver. A, 01082026, © Blaze 2026

BLAZE

Horizontal Sidewall Sprinkler K8.0(115)

Model : BL 5615 / BL 5616

Wrench & Key Description :

The Sprinkler Wrench and Key are specially designed installation tools for use exclusively with Sprinklers. Engineered to provide the correct grip and leverage, they ensure safe and accurate installation while reducing the risk of slippage or damage to the sprinkler. The use of non-approved installation tools is not recommended, as it may damage the sprinkler components and affect system performance.

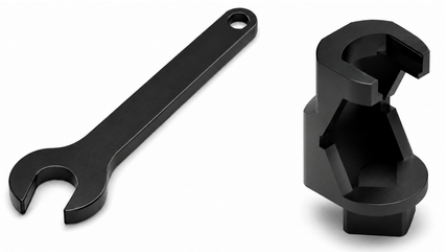

Wrench **Key**

Operation :

The Sprinkler operates using a frangible glass bulb filled with a heat-sensitive liquid. Under normal conditions, the bulb retains the sealing assembly in place. When exposed to fire, the surrounding temperature rises, causing the liquid inside the bulb to expand. Once the sprinkler's rated operating temperature is reached, the glass bulb shatters, releasing the sealing assembly and allowing water to flow through the sprinkler. The water is then discharged against the precision-engineered deflector, producing a controlled spray pattern designed to distribute water effectively for fire control and suppression.

Dimensions :

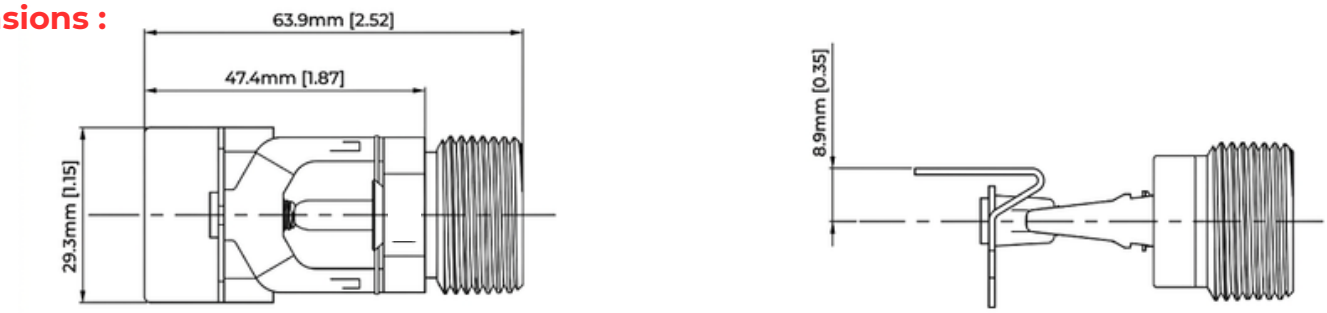

Horizontal Sidewall Sprinkler

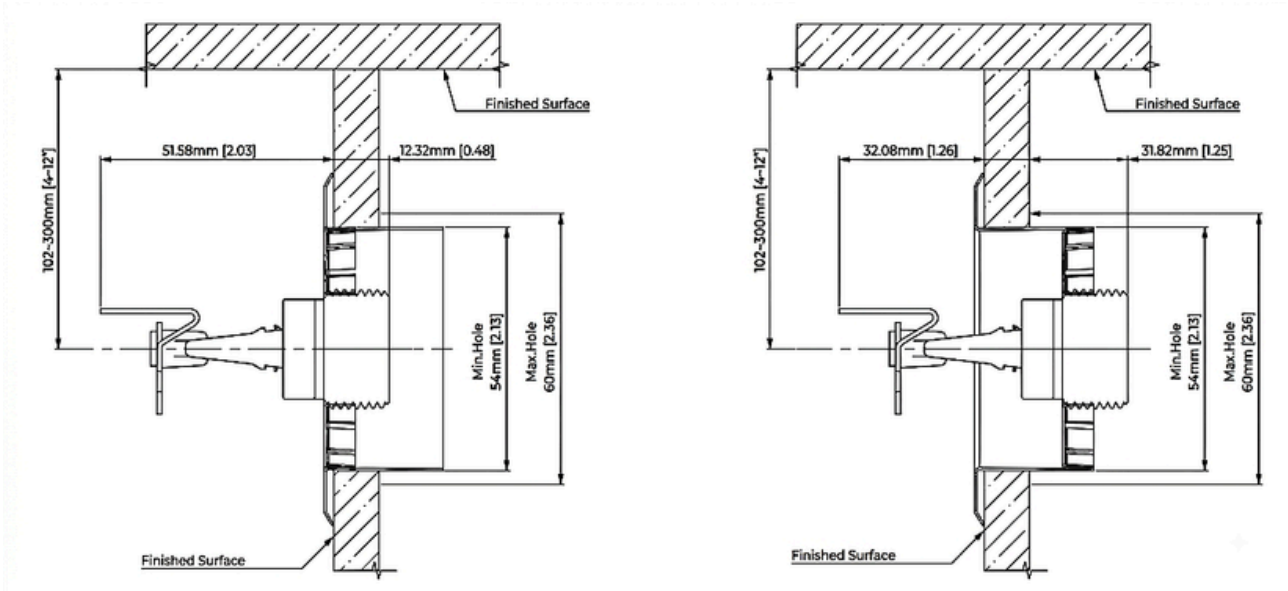

Maximum Extension **Maximum Recess**

BLAZETECH SYSTEMS LTD.

contact@blaze-tech.co.uk Milton Keynes, United Kingdom www.blaze-tech.co.uk

Disclaimer: Images shown are for illustration purposes only. Actual products may vary in appearance and specification. Specifications are subject to change without notice.

Ver. A, 01082026, © Blaze 2026

BLAZE

Horizontal Sidewall Sprinkler K8.0(115)

Model : BL 5615 / BL 5616

Part No.	Name
1	Frame
2	Deflector
3	Cap
4	Cap Seat
5	Load Screw
6	Seal
7	Bulb
8	Spring

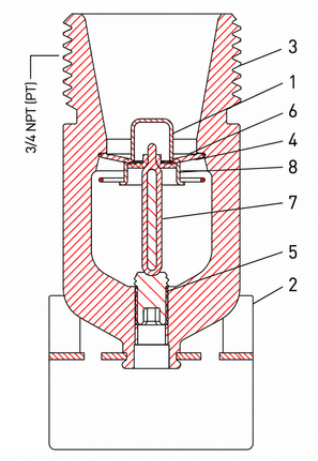

BL 5615
(Quick Response)

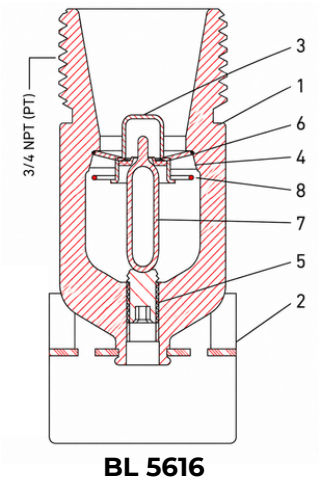

BL 5616
(Standard Response)

Design Coverage :

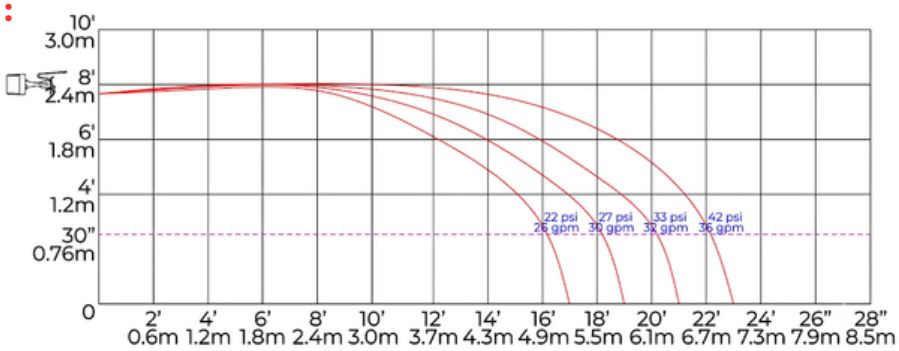

Flow Characteristics :

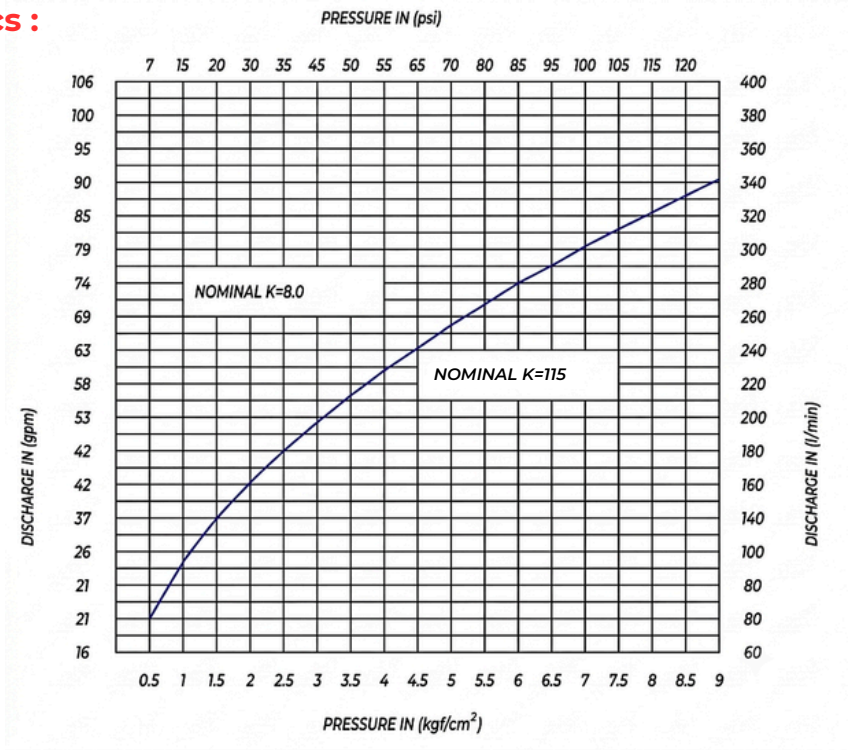

BLAZETECH SYSTEMS LTD.

contact@blaze-tech.co.uk Milton Keynes, United Kingdom www.blaze-tech.co.uk

Disclaimer: Images shown are for illustration purposes only. Actual products may vary in appearance and specification. Specifications are subject to change without notice.

PRECISION YOU CAN TRUST

Ver. A, 01082026, © Blaze 2026